JVC

SERVICE MANUAL

VIDEO CASSETTE RECORDER VHS

PAL SECAM NTSC

HR-D337MS

HQ

INDEX
VHS INDEX SEARCH SYSTEM

MULTIPLE SYSTEM

SPECIFICATIONS

Format : VHS standard

Recording system : Rotary, two-head helical scan system with slant double-azimuth combination video heads

Video signal system : PAL and SECAM colour and CCIR monochrome signals, 625 lines
: NTSC colour and EIA monochrome signals, 525 lines

Tape width : 12.65 mm

Maximum recording time
- (SP) : 240 min. with E-240 video cassette (PAL/SECAM)
  : 160 min. with T-160 video cassette (NTSC)
- (LP) : 480 min. with E-240 video cassette (PAL/SECAM)
- (EP) : 480 min. wtih T-160 video cassette (NTSC)

Temperature
- Operating : 5°C to 40°C
- Storage : -20°C to 60°C

Aerial input
- (Europe ch) : VHF ch E2 – E4
  ch E5 – E12, S1' – S20
  UHF ch E21 – E69
- (USA ch) : VHF ch 2 – 6, 7 – 13
  UHF ch 14 – 79
  CABLE ch A – I, J – W
- (JAPAN ch) : VHF ch 1 – 2, 3 – 12
  UHF ch 13 – 62

Aerial output : K, I, G, M modulation
- PAL : UHF 32 – 40 adjustable (preset E36 ch)
- NTSC (USA) : UHF 29 – 39 adjustable (preset 34 ch)
- NTSC (JAPAN) : UHF 28 – 38 adjustable (preset 33 ch)

Power consumption : 33 watts

Power requirement : AC110 – 240 V, 50/60 Hz

Video
- Input : 0.5 to 2.0 Vp-p 75 ohms, unbalanced
- Output : 1.0 Vp-p, 75 ohms, unbalanced
- Signal-to-noise ratio : 43 dB (PAL/SECAM), 45 dB (NTSC), (Rohde & Schwarz noise meter) with PICTURE SHARPNESS control at centre position
- Horizontal resolution : More than 240 lines (PAL/SECAM), 220 lines (NTSC) with PICTURE SHARPNESS control at centre position

Audio
- Input : Line: -8 dBs, 50 k-ohms, unbalanced
- Output level : -6 dBs, high impedance load
- Output impedance : Less than 1 k-ohm unbalanced
- Signal-to-noise ratio : More than 40 dB
- Frequency range : 70 Hz to 10,000 Hz

Timer : 14-day/4-programme timer

Dimensions : 435 mm(W) x 95 mm(H) x 374 mm(D)

Weight : 6.9 kg

Provided accessories : Aerial cable, Infrared remote control unit, "UM-4" battery x 2, Plug adapter

Specifications shown are for SP mode unless otherwise specified.
Design and Specifications subject to change without notice.

COPYRIGHT © 1988 VICTOR COMPANY OF JAPAN, LTD.

No. 8205[illegible]
May 1988

NOTE: For a technical description, please refer to Technical Guide VTG82025 HR-D337MS.

TABLE OF CONTENTS

Section	Title	Page
	Important Safety Precautions	
	INSTRUCTIONS	
1.	**MECHANISM ADJUSTMENT**	
1.1	GENERAL	1-1
1.2	MAIN ASSEMBLY REPLACEMENT	1-4
1.3	ASSEMBLY PROCEDURE OF MECHANISM	1-5
1.4	CONFIRMATION AND ADJUSTMENT	1-6
1.5	TAPE TRANSPORT SYSTEM CONFIRMATION AND ADJUSTMENT	1-7
1.6	INTERCHANGEABILITY CONFIRMATION AND ADJUSTMENT	1-8
2.	**ELECTRICAL ADJUSTMENTS**	
2.1	PREPARATION	2-1
2.2	TIMER CIRCUIT	2-2
2.3	SERVO CIRCUIT	2-2
2.4	VIDEO CIRCUIT	2-2
2.5	AUDIO CIRCUIT	2-5
2.6	IF CIRCUIT	2-5
3.	**CHARTS AND DIAGRAMS**	
3.1	CIRCUIT BOARD LOCATIONS	3-1
3.2	MAIN TYPES OF ACTIVE AND PACKAGE CIRCUITS	3-2
3.3	BOARD INTERCONNECTION DIAGRAM	3-3
3.4	VIDEO (LUMINANCE) BLOCK DIAGRAMS	3-4
3.5	VIDEO (COLOR) BLOCK DIAGRAMS	3-5
3.6	SWITCHING REGULATOR SCHEMATIC DIAGRAMS	3-6
3.7	SWITCHING REGULATOR CIRCUIT BOARD	3-7
3.8	MECHACON SCHEMATIC DIAGRAM	3-8
3.9	DECK TERMINAL SCHEMATIC DIAGRAMS	3-9
3.10	DECK TERMINAL CIRCUIT BOARDS	3-10
3.11	MECHACON AND TERMINAL CIRCUIT BOARDS	3-11
3.12	SERVO SCHEMATIC DIAGRAM	3-12
3.13	SERVO CIRCUIT BOARD	3-13
3.14	AUDIO SCHEMATIC DIAGRAM	3-14
3.15	VIDEO —Luminance Section— (MAIN) SCHEMATIC DIAGRAM	3-15
3.16	VIDEO —Color Section— (MAIN) SCHEMATIC DIAGRAM (1)	3-16
3.17	VIDEO —Color Section— (MAIN) SCHEMATIC DIAGRAM (2)	3-17
3.18	JUMP DET SCHEMATIC DIAGRAM	3-18
3.19	COLOR SCHEMATIC DIAGRAM	3-19
3.20	MAIN CIRCUIT BOARD	3-20
3.21	COLOR CIRCUIT BOARD/JUMP DET CIRCUIT BOARD	3-21
3.22	PRE/REC SCHEMATIC DIAGRAM	3-22
3.23	PRE/REC CIRCUIT BOARD	3-23
3.24	TUNER CONTROL SCHEMATIC DIAGRAM	3-24
3.25	TUNER CONTROL CIRCUIT BOARD	3-25
3.26	IF SCHEMATIC DIAGRAM	3-26
3.27	IF CIRCUIT BOARD	3-27
3.28	TIMER AND MEMORY SCHEMATIC DIAGRAMS	3-28
3.29	TIMER AND MEMORY CIRCUIT BOARDS	3-29
3.30	SWITCH/DISPLAY SCHEMATIC DIAGRAM	3-30
3.31	SWITCH/DISPLAY CIRCUIT BOARD	3-31
3.32	OPERATION SCHEMATIC DIAGRAM AND CIRCUIT BOARD	3-32
3.33	RF CONVERTOR AND MIX BOOSTER SCHEMATIC DIAGRAM	3-33
3.34	REMOTE CONTROL SCHEMATIC DIAGRAM	3-34
4.	**EXPLODED VIEWS AND PARTS LIST**	
4.1	PACKING ASSEMBLY <M1>	4-1
4.2	CABINET ASSEMBLY <M2>	4-2
4.3	CHASSIS ASSEMBLY <M3>	4-3
4.4	MECHANISM ASSEMBLY <M4>	4-4
5.	**PARTS LIST**	
	SW. REGULATOR BOARD ASSEMBLY <01>	5-1
	MAIN BOARD ASSEMBLY <03>	5-1
	MECHACON BOARD ASSEMBLY <04>	5-8
	TERMINAL BOARD ASSEMBLY <06>	5-9
	IF BOARD ASSEMBLY <07>	5-9
	TUNER CONTROL BOARD ASSEMBLY <08>	5-11
	AUDIO/CTL HEAD BOARD <12>	5-11
	TIMER BOARD ASSEMBLY <20>	5-12
	OPERATION BOARD ASSEMBLY <22>	5-12
	SWITCH/DISPLAY BOARD ASSEMBLY <28>	5-12
	MEMORY BOARD ASSEMBLY <35>	5-13
	UPPER DRUM BOARD <41>	5-13
	PRE/REC BOARD ASSEMBLY <43>	5-13
	SERVO BOARD ASSEMBLY <48>	5-14
	COLOR BOARD ASSEMBLY <45>	5-15
	DECK TERMINAL BOARD ASSEMBLY <51><53>	5-17
	RELAY BOARD ASSEMBLY <52>	5-17
	END SENSOR BOARD ASSEMBLY <54>	5-17
	CASSETTE HOUSING BOARD <56>	5-17
	JUMP DETECTOR BOARD ASSEMBLY <70>	5-18

Important Safety Precautions

Prior to shipment from the factory, JVC products are strictly inspected to conform with the recognized product safety and electrical codes of the countries in which they are to be sold. However, in order to maintain such compliance, it is equally important to implement the following precautions when a set is being serviced.

● Precautions during Servicing

1. Locations requiring special caution are denoted by labels and inscriptions on the cabinet, chassis and certain parts of the product. When performing service, be sure to read and comply with these and other cautionary notices appearing in the operation and service manuals.

2. Parts identified by the ⚠ symbol and shaded (▒) parts are critical for safety.
   Replace only with specified part numbers.
   Note: Parts in this category also include those specified to comply with X-ray emission standards for products using cathode ray tubes and those specified for compliance with various regulations regarding spurious radiation emission.

3. Fuse replacement caution notice.
   Caution for continued protection against fire hazard.
   Replace only with same type and rated fuse(s) as specified.

4. Use specified internal wiring. Note especially:
   1) Wires covered with PVC tubing
   2) Double insulated wires
   3) High voltage leads

5. Use specified insulating materials for hazardous live parts. Note especially:
   1) Insulation Tape
   2) PVC tubing
   3) Spacers
   4) Insulation sheets for transistors
   5) Barrier

6. When replacing AC primary side components (transformers, power cords, noise blocking capacitors, etc.) wrap ends of wires securely about the terminals before soldering.

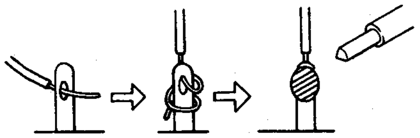

Fig. 1

7. Observe that wires do not contact heat producing parts (heatsinks, oxide metal film resistors, fusible resistors, etc.)

8. Check that replaced wires do not contact sharp edged or pointed parts.

9. When a power cord has been replaced, check that 10–15 kg of force in any direction will not loosen it.

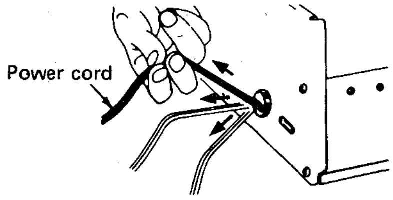

Fig. 2

10. Also check areas surrounding repaired locations.

11. Products using cathode ray tubes (CRTs)
    In regard to such products, the cathode ray tubes themselves, the high voltage circuits, and related circuits are specified for compliance with recognized codes pertaining to X-ray emission. Consequently, when servicing these products, replace the cathode ray tubes and other parts with only the specified parts. Under no circumstances attempt to modify these circuits. Unauthorized modification can increase the high voltage value and cause X-ray emission from the cathode ray tube.

12. Crimp type wire connector
    In such cases as when replacing the power transformer in sets where the connections between the power cord and power transformer primary lead wires are performed using crimp type connectors, if replacing the connectors is unavoidable, in order to prevent safety hazards, perform carefully and precisely according to the following steps.

    1) **Connector part number** : E03830-001
    2) **Required tool** : Connector crimping tool of the proper type which will not damage insulated parts.
    3) **Replacement procedure**
       (1) Remove the old connector by cutting the wires at a point close to the connector.
       Important : Do not reuse a connector (discard it).

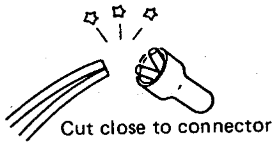

Fig. 3

       (2) Strip about 15 mm of the insulation from the ends of the wires. If the wires are stranded, twist the strands to avoid frayed conductors.

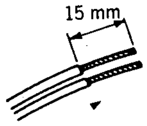

Fig. 4

       (3) Align the lengths of the wires to be connected. Insert the wires fully into the connector.

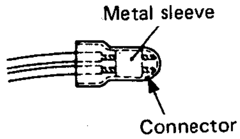

Fig. 5

       (4) As shown in Fig. 6, use the crimping tool to crimp the metal sleeve at the center position. Be sure to crimp fully to the complete closure of the tool.

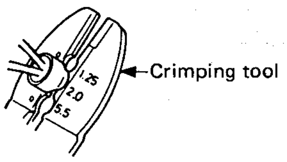

Fig. 6

       (5) Check the four points noted in Fig. 7.

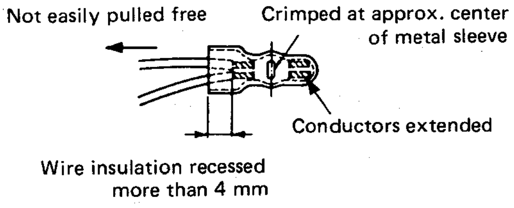

Fig. 7

• Safety Check after Servicing

Examine the area surrounding the repaired location for damage or deterioration. Observe that screws, parts and wires have been returned to original positions, Afterwards, perform the following tests and confirm the specified values in order to verify compliance with safety standards.

1. **Insulation resistance test**
   Confirm the specified insulation resistance or greater between power cord plug prongs and externally exposed parts of the set (RF terminals, antenna terminals, video and audio input and output terminals, microphone jacks, earphone jacks, etc.). See table 1 below.

2. **Dielectric strength test**
   Confirm specified dielectric strength or greater between power cord plug prongs and exposed accessible parts of the set (RF terminals, antenna terminals, video and audio input and output terminals, microphone jacks, earphone jacks, etc.). See table 1 below.

3. **Clearance distance**
   When replacing primary circuit components, confirm specified clearance distance (d), (d') between soldered terminals, and between terminals and surrounding metallic parts. See table 1 below.

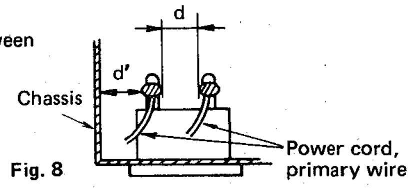

Fig. 8

4. **Leakage current test**
   Confirm specified or lower leakage current between earth ground/power cord plug prongs and externally exposed accessible parts (RF terminals, antenna terminals, video and audio input and output terminals, microphone jacks, earphone jacks, etc.).
   Measuring Method: (Power ON)
   Insert load Z between earth ground/power cord plug prongs and externally exposed accessible parts. Use an AC voltmeter to measure across both terminals of load Z. See figure 9 and following table 2.

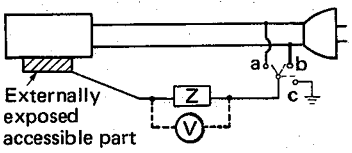

Fig. 9

5. **Grounding (Class I model only)**
   Confirm specified or lower grounding impedance between earth pin in AC inlet and externally exposed accessible parts (Video in, Video out, Audio in, Audio out or Fixing screw etc.).
   Measuring Method:
   Connect milli ohm meter between earth pin in AC inlet and exposed accessible parts. See figure 10 and grounding specifications.

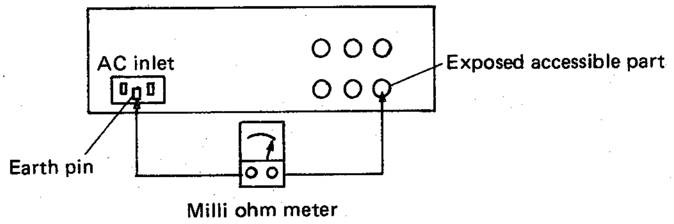

Fig. 10

Grounding Specifications

Region	Grounding Impedance (Z)
USA & Canada	Z ≦ 0.1 ohm
Europe & Australia	Z ≦ 0.5 ohm

AC Line Voltage	Region	Insulation Resistance (R)	Dielectric Strength	Clearance Distance (d), (d')
100 V	Japan	R ≧ 1 MΩ/500 V DC	AC 1 kV 1 minute	d, d' ≧ 3 mm
100 to 240 V			AC 1.5 kV 1 minute	d, d' ≧ 4 mm
110 to 130 V	USA & Canada	—	AC 900 V 1 minute	d, d' ≧ 3.2 mm
110 to 130 V 200 to 240 V	Europe & Australia	R ≧ 10 MΩ /500 V DC	AC 3 kV 1 minute (Class II) AC 1.5 kV 1 minute (Class I)	d ≧ 4 mm d' ≧ 8 mm (Power cord) d' ≧ 6 mm (Primary wire)

Table 1 Specifications for each region

AC Line Voltage	Region	Load Z	Leakage Current (i)	a, b, c
100 V	Japan	1 kΩ	i ≦ 1 mA rms	Exposed accessible parts
110 to 130 V	USA & Canada	0.15 μF ∥ 1.5 kΩ	i ≦ 0.5 mA rms	Exposed accessible parts
110 to 130 V 220 to 240 V	Europe & Australia	2 kΩ	i ≦ 0.7 mA peak i ≦ 2 mA dc	Antenna earth terminals
		50 kΩ	i ≦ 0.7 mA peak i ≦ 2 mA dc	Other terminals

Table 2 Leakage current specifications for each region

Note: These tables are unofficial and for reference only. Be sure to confirm the precise values for your particular country and locality.

JVC Instructions

VIDEO CASSETTE RECORDER
HR-D337MS

MANUEL D'INSTRUCTIONS:
MAGNETOSCOPE A CASSETTE

BEDIENUNGSANLEITUNG:
VIDEO-KASSETTEN-REKORDER

دليل التعليمات
مسجل كاسيت الفيديو

VHS INDEX SEARCH SYSTEM

MULTIPLE SYSTEM

PAL SECAM NTSC

PU30425-987

CONTENTS

Features	2
Precautions	3
Controls, indicators and connectors	4
Connections	6
Video channel setting	6
Important information on colour system selection	7
Clock setting	11
Loading and unloading a cassette	11
Operating the built-in tuner	12
Playing back a video cassette	13
Recording TV programmes	14
Index search and counter search	15
Elapsed recording time indicator	15
Counter Go-To function	16
Next-function memory	16
Automatic timer recording	17
Recording from an external source	18
In case of difficulty	19
Head cleaning	19
Specifications	20

SAFETY PRECAUTIONS

The rating plate and the safety caution are on the rear of the unit.

WARNING – DANGEROUS VOLTAGE INSIDE
WARNING: TO PREVENT FIRE OR SHOCK HAZARD, DO NOT EXPOSE THIS UNIT TO RAIN OR MOISTURE.

IMPORTANT (In the United Kingdom)
Mains Supply (240 V∿, 50 Hz only)

IMPORTANT

Do not make any connection to the Larger Terminal coded E or Green. The wires in the mains lead are coloured in accordance with following code:

If these colours do not correspond with the terminal identifications of your plug, connect as follows:
Blue wire to terminal coded N (Neutral) or coloured Black.
Brown wire to terminal coded L (Live) or coloured Red.
If in doubt – consult a competent electrician.

CAUTION

- When you are not using the HR-D337MS for a long period of time, it is recommended that you disconnect the power cord from the AC outlet.
- Dangerous voltage inside. Refer internal servicing to qualified service personnel. To prevent electric shock or fire hazard, remove the power cord from the AC outlet prior to connecting or disconnecting any signal lead or aerial.

PAL SECAM NTSC

- Only cassettes marked "VHS" can be used with this video cassette recorder.
- HQ VHS is compatible with existing VHS equipment.

FOR YOUR SAFETY (in Australia)
Install any external aerial to AS 1417.1

Omkopplaren OPERATE på denna apparat är sekundärt kopplad och skiljer inte apparaten från nätet i läge OPERATE OFF.

The OPERATE button does not completely shut off mains power from the unit, but switches operating current on and off.

BEMAERK: I stilling OFF er apparatet stadig forbundet med lysnettet Hvis det ønskes fuldstændig afbrudt skai netledningen trækkes ud.

This unit is produced to comply with Directive 82/499/EEC, CISPR Pub. 13 and Pub. 14 and Standard IEC 65.

Video tapes recorded with this video recorder in the LP (Long Play) or EP (Extended Play) mode cannot be played back on a single-speed video recorder.

POWER SYSTEM
This set operates on any voltage between 110 and 240 V, 50/60 Hz with automatic switching.
There is no switch nor control for power line adaptation.

Use the plug adapter (provided) depending on the type of your AC wall outlet.

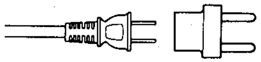

COPYRIGHT © 1988 VICTOR COMPANY OF JAPAN, LTD.

Printed in Japan

Multi-system flexibility
- **PAL/MESECAM/SECAM/NTSC3.58/NTSC4.43** five-system recording and playback circuitry incorporated to adapt to television colour systems the world over.
- **Worldwide-compatible multi-system tuner (B/G, I, D/K, M)** built in to directly receive off-air TV programmes in most countries. (A separate tuner will be needed in SECAM-L areas.)
- **Multi-system RF converter (G, I, K, M) for UHF channels** built in to provide greater compatibility with televisions.
- **Multi-voltage operation with automatic switching (110 – 240 V AC)**

High-quality pictures
- **HQ (High Quality) System technologies** with a Detail Enhancer (DE) and 20 % higher White Clip Level (WCL).
- **Long 8-hour recording time** in the LP (Long Play) mode for PAL/SECAM/MESECAM recording or EP mode (Extended Play) mode for NTSC recording.
- **Double-Azimuth 4-head (DA-4) system** for quality recording and playback at both recording speeds.
- **Noiseless field stills and 5-speed slow motion** available with PAL/SECAM/MESECAM SP mode recordings.

Tuner and timer features
- **Voltage synthesized VHF/UHF/CATV (NTSC-M) tuner** with 32-channel preset capacity.
- **10-Key random-access remote channel selection** and up/down scanning.
- **Instant timer recording** with auto shut-off.
- **14-Day/4-event programmable timer.**
- **Overlapped programme warning:** programme numbers on the FDP blink when the preset time spans of the programmes overlap.
- Timer programme review to show the preset programme contents in the order of execution.

Tape access features
- **Index Search** for locating the beginning of each recording for automatic start of playback, by detecting the index code automatically marked when recording was initiated.
- **Counter go-to function** for direct access to any point on a tape specified by keying in a counter number with the 10 numeric keys.
- **Shuttle Search with lock function:** with the button locked or held depressed for instant release, offers high-speed playback at 9 times (PAL/SECAM/MESECAM) or 7 times (NTSC) normal speed in either direction.
- Counter memory for returning to a point on a tape corresponding to the counter reading of "0000".

Other value features
- Automatic functions including Auto Play and Next-Function Memory.
- Infrared remote control with 10-digit keypad for channel selection.
- On-screen record-pause mode display which signals elapsed pause time.
- Electronic tracking controls.
- Comprehensive fluorescent display.
- Tape counter switchable to elapsed recording time indicator.
- Picture sharpness control.

Handling and storage
- Avoid using the recorder under the following conditions:
  - extremely hot, cold or humid places,
  - dusty places,
  - near appliances generating strong magnetic fields,
  - places subject to vibrations, and
  - poorly ventilated places.
- Be careful of moisture condensation.
  Avoid using the recorder immediately after moving from a cold place to a warm place. The water vapour in warm air will condense on the still-cold video head drum and tape guides and may cause damage to the tape and the recorder.
- Handle the recorder carefully.
  - Do not block the ventilation openings.
  - Do not place anything heavy on the recorder.
  - Do not place anything which might spill and cause trouble on the top cover of the recorder.
  - Use in horizontal (flat) position only.
- In case of transportation,
  - Avoid violent shocks to the recorder during packing and transportation.
  - Before packing, be sure to remove the cassette from the recorder.

Video cassettes
- This recorder employs VHS-type cassettes only.

Cassettes	Recording time	Recording system
E-240	240/480 minutes	PAL/SECAM/MESECAM
E-180	180/360 minutes	PAL/SECAM/MESECAM
E-120	120/240 minutes	PAL/SECAM/MESECAM
E-90	90/180 minutes	PAL/SECAM/MESECAM
E-30	30/60 minutes	PAL/SECAM/MESECAM
T-160	160/480 minutes	NTSC
T-120	120/360 minutes	NTSC
T-90	90/270 minutes	NTSC
T-60	60/180 minutes	NTSC
T-30	30/90 minutes	NTSC

- Video cassettes are equipped with a safety tab to prevent accidental erasure. When the tab is removed, recording cannot be performed. If you wish to record on a cassette whose tab has already been removed, use adhesive tape to block the hole.

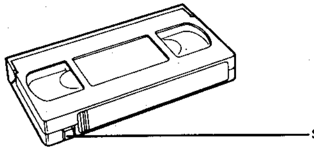

- Avoid exposing the cassettes to direct sunlight. Keep them away from heaters.
- Avoid extreme humidity, violent vibrations or shocks, strong magnetic fields (near a motor, transformer or magnet) and dusty places.
- Place the cassettes in cassette cases and position vertically.

Moisture condensation
- If you pour a cold liquid into a glass, water vapour in the air will condense on the surface of the glass. This is called moisture condensation.
- Moisture condensation on the head drum, one of the most crucial parts of the video recorder, will cause damage to the tape.
- Moisture condensation is apt to occur under the following conditions:
  - when the recorder is moved from a cold place to a warm place, and
  - under extremely humid conditions.
- In conditions where moisture condensation may occur, keep the power cord plugged in an AC outlet and the OPERATE switch set to ON; this would help prevent condensation from occurring. When condensation has occurred, it will not evaporate quickly once the power is switched on. Wait a few hours for the recorder to become dry.

Operation
- When a cassette is loaded, the power is switched on automatically.
- The cassette can be unloaded even when the power is off. Pressing the EJECT button turns the power on and, after ejection of the cassette, shuts it off automatically in this case.
- As long as the TIMER button is engaged with the TIMER indicator lit, the OPERATE and EJECT buttons have no effect and unloading of a cassette is not possible. If a cassette has not yet been inserted, simply insert a cassette; the power will be switched on to load the cassette properly and, after completion of automatic loading, the Timer Recording Standby mode will be engaged with power off.

Remote control unit
- Avoid violent shocks, especially take care not to drop the unit.
- Take care not to allow liquid to spill into the unit.
- Do not place heavy objects on the unit.
- Avoid leaving the unit in places subject to direct sunlight or extremely high temperatures.

IMPORTANT: It is permissible to record television programmes only in the event that third party copyrights and other rights are not violated.

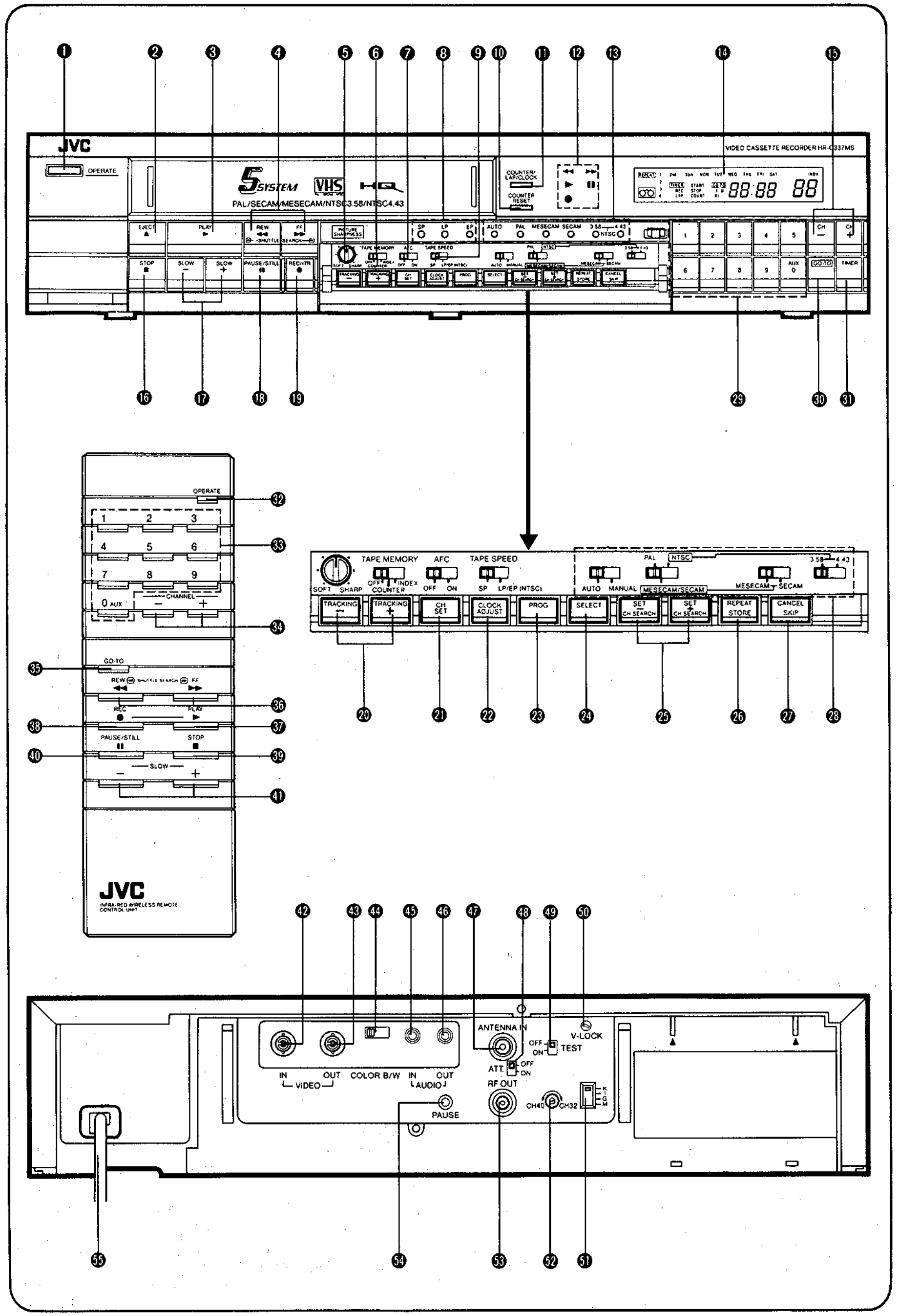

CONTROLS, INDICATORS AND CONNECTORS

Refer to the diagrams on the front foldout page.

Front Panel

① OPERATE button with green indicator
Press to apply operating power to the recorder. The indicator will light. Loading a cassette also turns the power on.

② Cassette EJECT button

③ PLAY button
Press to play back the tape or cancel the Pause/Still and Search modes.

④ REW and FF (SHUTTLE SEARCH) buttons
Press while in the Stop mode to rewind or fast-forward the tape; press while in the Play mode to view the speeded-up picture for programme search. See page 13, 15 and 16.

⑤ PICTURE SHARPNESS control
Turn this knob clockwise to make the picture sharper. Turn counterclockwise to give the picture a softer tone. Effective only for playback pictures. (No effect for recording.)

⑥ TAPE MEMORY switch

COUNTER: The tape will stop automatically at the counter reading of about "0000" in the Rewind or Fast Forward mode. See page 15.

INDEX: The index code marked at the beginning of each recording will be detected in the Shuttle Search mode for automatic start of playback. See page 15.

OFF: Set to OFF if you are not going to use either of the two functions.

⑦ AFC switch
Normally set to ON.

⑧ SP/LP/EP indicators
The recording speed selected with the TAPE SPEED switch ⑨ is indicated by one of these LED indicators.

SP: Lights when the SP position is selected.

LP: Lights when the LP/EP position is selected with the PAL/MESECAM/SECAM system working.

EP: Lights when the LP/EP position is selected with the NTSC system working.

- During playback, the tape mode will automatically be detected and the corresponding LED will light.
- NTSC LP tapes (recorded at half-speed on some other machines) can also be played back on this recorder, but the LP indicator will not function for these recordings.

⑨ TAPE SPEED switch

SP: Set to this position when you wish recordings to be made in the SP (Standard Play) mode for all systems.

LP/EP (NTSC): Set to this position when you wish to record longer TV shows or for unattended and prolonged recording of a number of TV shows with a combined time of up to 8 hours. In PAL/SECAM/MESECAM, the LP (Long Play) mode will be engaged; in NTSC, the EP (Extended Play) mode will be engaged.

⑩ COUNTER RESET button
Press to reset the counter reading or lap time to "0000" or "0:00" respectively.

⑪ COUNTER/LAP/CLOCK button
Press to switch the display among tape counter, lap time indicator and clock. Also used to change the display from the timer programming mode to the clock mode.

⑫ Mode indicators

◀◀: Rewind mode
▶▶: Fast Forward mode
▶: Play mode
▶❚❚: Still or Slow mode
●▶❚❚: Pause mode (In the Pause mode, a white bar will also be displayed on the TV screen.)
●▶: Record mode
◀◀ ▶: Reverse Shuttle Search mode
▶▶ ▶: Forward Shuttle Search mode

⑬ Colour system indicators
These indicators show the selected colour system according to the detected input signal or the settings of the colour system select switches ㉘. For more details refer to pages 7 through 10.

⑭ Fluorescent display panel

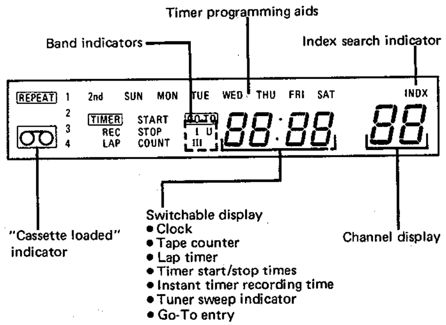

⑮ CH -/+ buttons
Press either button to scan to a desired channel.

⑯ STOP button
Press to stop the tape.

⑰ SLOW -/+ buttons
Press in the Play or Still mode to engage the Slow-motion mode. To increase the speed, press "+" button; to decrease the speed, press "–" button (see page 13).

⑱ PAUSE/STILL button
Press to stop the tape temporarily to avoid recording of unwanted material or to view a still picture. The still picture can be advanced step by step or continuously.

⑲ REC/ITR button
Press once to start recording. Pressing it again engages the Instant Timer Recording mode. See page 14.

⑳ TRACKING -/+ buttons
Press either button to minimise noise bars, if observed, during playback and slow-motion.

㉑ CH SET button
Press this button to engage or disengage the tuner perset mode (see page 12).

㉒ CLOCK ADJUST button
Press to adjust the clock.

㉓ PROG button
Press to programme the timer.

(24) **SELECT button**
Press to select the band in tuner presetting; press to select the item to be set in clock setting or timer programming.

(25) **SET/CH SEARCH -/+ buttons**
Press to set to the correct data in clock setting or timer programming; press to search for broadcast programmes in tuner presetting.

(26) **REPEAT/STORE button**
Press to enter the repeat command in timer programming; press to store the tuned-in channel in tuner presetting.

(27) **CANCEL/SKIP button**
Press to cancel the preset programme in timer programming; press to skip unnecessary channels in tuner presetting.

(28) **Colour system select switches**

- **AUTO/MANUAL switch**
  A master switch for selecting the television colour system. First set this switch to either AUTO or MANUAL depending on the required mode. When the MANUAL mode is selected, set the other system select switches manually as required. For more details refer to page 10.
- **PAL/MESECAM/SECAM/NTSC switch**
  Use this switch to manually select the appropriate sysem when the AUTO/MANUAL switch is set to MANUAL. For more details refer to page 10.
- **MESECAM/SECAM switch**
  Use this switch to select the appropriate system. This switch must be set correctly even in the AUTO mode. For more details refer to page 10.
- **NTSC 3.58/4.43 switch**
  Use this switch to select the appropriate system. This switch must be set correctly even in the AUTO mode. For more details refer to page 10.

(29) **Numeric keys**
Use these keys for direct channel selection (see page 12) or key in the counter number in the Counter Go-To mode. The "0" key can also be used to select the external source recording mode (AUX), in which "AU" will appear in the channel display.

(30) **GO-TO button**
Press to engage the Counter Go-To mode. See page 16.

(31) **TIMER button**
Press to engage the Timer Recording Standby mode.

Remote Control Unit

(32) **OPERATE button**
Press to turn the recorder power on or off.
(33) **Numeric keys**
(34) **CHANNEL -/+ buttons**
Press either button to select a desired channel.
(35) **GO-TO button**
(36) **REW and FF (SHUTTLE SEARCH) buttons**
(37) **PLAY button**
(38) **REC button**
Press together with the PLAY button to start recording.
(39) **STOP button**
(40) **PAUSE/STILL button**
(41) **SLOW buttons**

Operating distance for remote control unit
- The maximum operating distance is about 8 m.

Installing the batteries
- Insert two "UM-4"-size batteries (provided) into the battery compartment on the rear of the remote control unit, observing correct polarity.

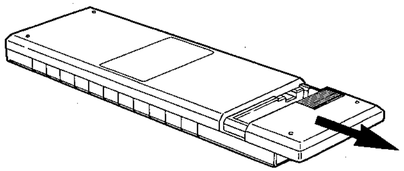

Rear Panel

(42) **VIDEO IN connector**
Connect the video output of other video equipment such as another video tape recorder for recording video signals.

(43) **VIDEO OUT connector**
Video signals being recorded or played back are available from this connector.

(44) **Video mode select switch**
This applies to both recording and playback.
COLOR: Set to this position when the input or playback video signal is in colour.
B/W: Set to this position when the input or playback video signal is monochrome.

(45) **AUDIO IN connector**
Connect an audio tape recorder or other audio sources for recording sound.

(46) **AUDIO OUT connector**
Audio signals can be obtained from this connector.

(47) **Aerial input connector (ANTENNA IN)**
Connect an aerial to this connector.

(48) **Attenuator switch (ATT.)**
Set to OFF to receive broadcasts from distant stations. Set to ON to receive broadcasts of high field strength.

(49) **TEST signal switch**
Set to ON when tuning your TV receiver for the VIDEO CHANNEL. A test signal in the form of two vertical white bars will be available.

(50) **V-LOCK adjustment screw**
When operating in the Still mode, adjust this screw to eliminate any vertical vibration of the picture. (For any inquiry about this adjustment, contact a JVC dealer.)

(51) **SYSTEM select switch**
Selects the system of the built-in RF converter.
Select K, I, G or M depending on the system of your television receiver.
This switch is preset to G prior to shipment.

(52) **RF converter frequency adjustment screw**
See below.

(53) **RF OUT connector**
Connect to the aerial connector of a TV receiver through the aerial cable (provided).

(54) **Remote PAUSE terminal**
When using a JVC video camera, connect the remote control cable of the camera adapter to this terminal for the purpose of controlling the starting and stopping of the tape with the camera's start/stop switch.

(55) **Power cord**

CONNECTIONS

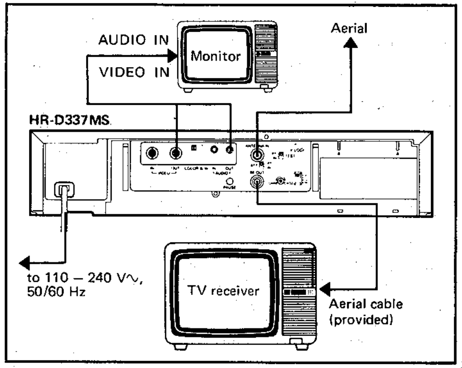

1. Remove the aerial cable from the TV receiver and reconnect it to the recorder's ANTENNA IN (47) connector. The recorder is then ready to record off-air programmes.
2. Connect the recorder's RF OUT connector (53) to the TV receiver's aerial terminal using the provided aerial cable. The TV receiver is then ready to receive broadcast programmes as well as accommodate video cassette playback.
3. When you use a video monitor for playback, connect the VIDEO OUT (43) and AUDIO OUT (46) connectors of the recorder to the VIDEO IN and AUDIO IN connectors of the video monitor.

- Use the plug adapter (provided) depending on the type of your AC wall outlet.

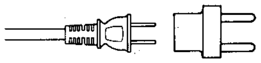

VIDEO CHANNEL SETTING

1. Press the OPERATE button (1) to turn the power on. Turn on the TV receiver.
2. Set the TEST switch (49) to ON.
3. Adjust your TV receiver in the vicinity of UHF channel E36 until you bring in the two white signal bars on the screen as illustrated. This is your VIDEO CHANNEL.
   *UHF channel 34 in the USA, and UHF channel 33 in Japan.
4. Reset the TEST switch to OFF.

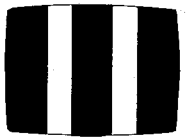

Notes:
- If some interference noise is seen on the screen because of broadcasts on neighbouring channels or if your preset broadcasts should be affected in picture quality, it is necessary to shift the RF converter output frequency from that of channel E36. Consult your JVC dealer for making this adjustment.
- Video channel setting is also possible using a prerecorded VHS video cassette. Play back the tape and tune the TV receiver to obtain clear pictures and sound while monitoring the playback picture on the TV screen.
- If your TV receiver is not provided with an AFC circuit, perform fine tuning of the TV receiver when you are actually viewing video cassettes.
- Set the SYSTEM select switch (51) to the appropriate position.

IMPORTANT INFORMATION ON COLOUR SYSTEM SELECTION

The HR-D337MS incorporates the circuitry necessary to record or play back PAL, SECAM and NTSC signals from any television broadcasting system in the world. To select the right colour system, there are four switches on the HR-D337MS:

AUTO/MANUAL switch: A master switch to select the automatic or manual setting mode. In most cases, when this switch is set to AUTO, the appropriate system will be selected according to the input or playback signal, provided that the relevant sub switch is set correctly for MESECAM/SECAM recording or NTSC playback.

PAL/MESECAM-SECAM/NTSC switch: To select the appropriate system in the MANUAL mode.

MESECAM/SECAM switch: A sub switch to select the type of resulting recorded tape as required. When recording, this switch must be set correctly in both the AUTO and MANUAL modes.

NTSC 3.58/4.43 switch: A sub switch to select the type of monitor on which NTSC tapes are to be viewed. During playback this switch must be set correctly in both the AUTO and MANUAL modes.

OFF-AIR RECORDING

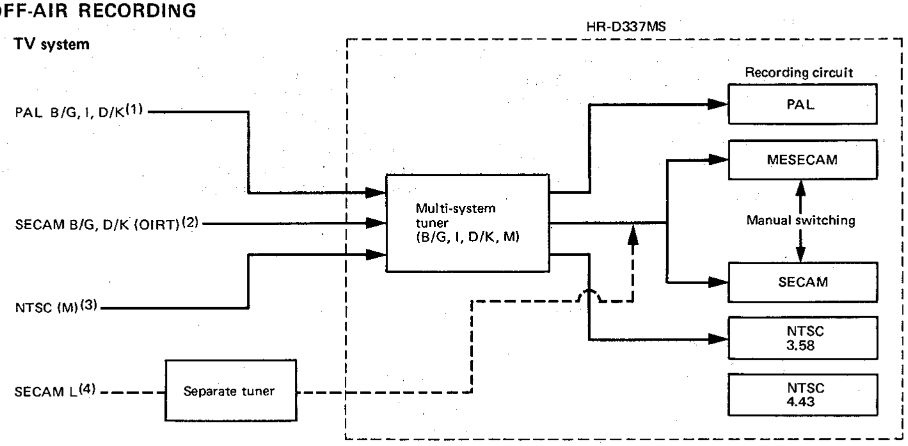

The built-in multi-system tuner is capable of receiving PAL B/G, I and D/K, SECAM B/G and D/K, and NTSC broadcasts.

1. **PAL B/G, I and D/K broadcasts**
   PAL B/G is the colour television broadcasting sytem used in most Continental European countries (except France, Luxemburg and Monaco) and some countries of the Middle East, Africa and Asia. PAL I is the system used in the United Kingdom and Hong Kong, and PAL D/K, in various countries. The built-in tuner can be used to record off the air in these countries. Simply set the master switch to AUTO.
2. **SECAM B/G and D/K (OIRT) broadcasts**
   SECAM B/G is the colour television broadcasting system employed in many countries of the Middle East and Africa, and a few Eastern European countries including East Germany, while SECAM D/K is the system used in most Eastern European countries. TV broadcasts in these countries can be recorded using the built-in tuner. If the MANUAL mode is selected with the master switch, set the system switch to MESECAM/SECAM, and, whether in AUTO or MANUAL, the MESECAM/SECAM switch to either MESECAM or SECAM depending on the type of resulting tape you want.
3. **NTSC broadcasts**
   NTSC is the colour television broadcasting system used in the USA, Canada, Japan, several Latin American countries and a few Asian countries. TV broadcasts in these countries can be recorded using the built-in tuner. The broadcast NTSC signal has a colour subcarrier frequency of 3.58 MHz. Therefore, in the AUTO mode, the NTSC 3.58 circuit is automatically selected.
4. **SECAM L broadcasts**
   SECAM L is the colour television broadcasting system usually identified as the French SECAM system and is employed in France and a few other countries. To record off the air in these countries, a tuner (or monitor-receiver) of the SECAM L system is necessary.

For further information, consult your nearest JVC dealer.

CAMERA RECORDING

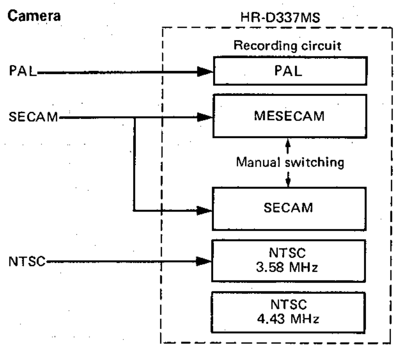

Video cameras are built to one of the three standards; PAL, SECAM or NTSC. Any camera can be used with this recorder. The switch settings are identical to those for recording broadcasts of each system. The resulting recording corresponds to the respective system. Remember, for instance, that it is not possible to produce NTSC tapes with a PAL camera even if the NTSC system is selected manually.

TAPE-TO-TAPE TRANSFER

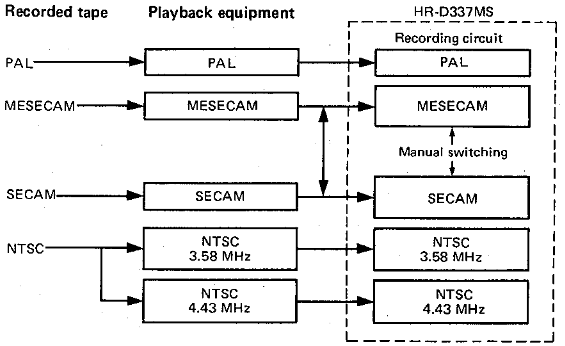

There are 4 different types of recorded tape, depending on the signal recorded.

PAL tapes: Whatever broadcasts (B/G, I, D/K) the recording was made from, the resulting tape contains the same PAL signal. To transfer PAL tapes, a second recorder built to the PAL standard is required to play them back. The switch settings are identical to those for recording PAL broadcasts.

MESECAM tapes: MESECAM is a designation for tapes of SECAM broadcasts or SECAM camera signals that have been recorded with PAL/MESECAM recorders or through the MESECAM circuit of this recorder. To transfer MESECAM signals, use a second recorder which is capable of processing MESECAM signals. Depending on what type of tape is desired, either the MESECAM or SECAM circuit of this recorder can be used for recording.

SECAM tapes: Whatever broadcasts (B/G, D/K) the recording was made from, the resulting tape contains the same SECAM signal. To transfer SECAM signals, use a second recorder of the SECAM standard. Depending on what type of tape is desired, either the MESECAM or SECAM circuit of this recorder can be used for recording.

NTSC tapes: Playback equipment can be either of the NTSC 3.58 MHz or 4.43 MHz system. Depending on the played back tape signal, this recorder automatically selects the corresponding system in the AUTO mode.

PLAYBACK

Recorded Tape

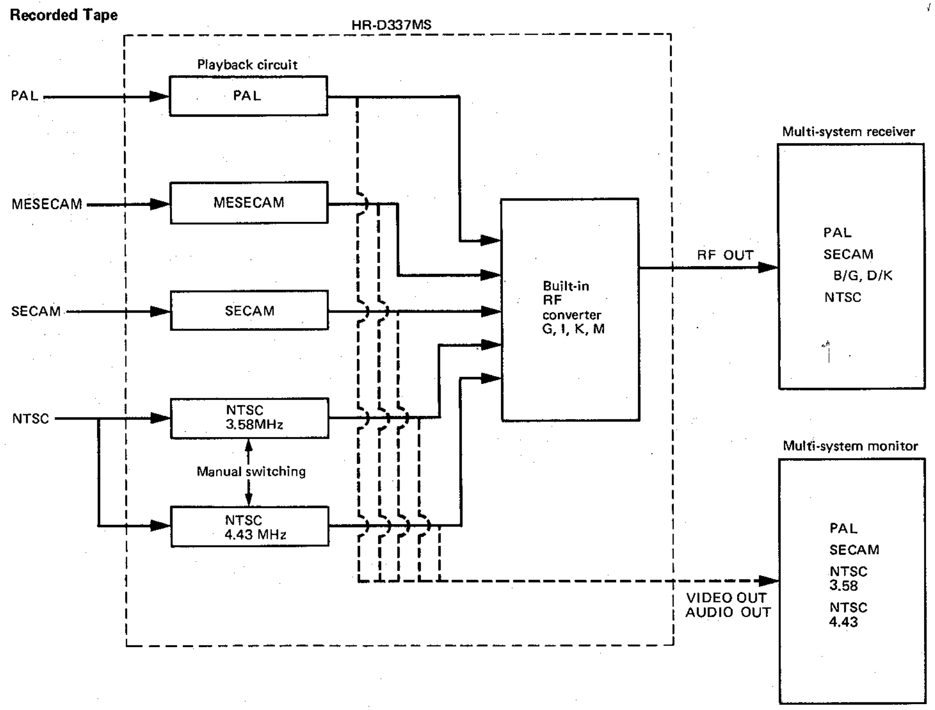

The HR-D337MS can play back all 4 types of recorded tape. The built-in multi-system RF converter processes all signals for output from the RF OUT connector. Therefore, with a multi-system receiver, you can view all types of tape via RF connection. If you own a multi-system monitor, use the VIDEO OUT/AUDIO OUT connection. If your receiver or monitor is not equipped with the NTSC 3.58 MHz circuit, but only with NTSC 4.43 MHz, be sure to set the NTSC 3.58/4.43 switch to 4.43 when playing back NTSC tapes.

CAUTION
When the HR-D337MS is connected to a multi-system television set, it may happen that no colours appear on the screen if the colour system select switch of the television set is adjusted to the AUTO position. In such a case, change the setting of the colour system select switch of the television set to the position which corresponds to the setting (G, I, K or M) of the RF converter system select switch on the rear panel of the HR-D337MS.

System select switch settings & Indicators

Use	Source	System select switches						Indicators	Remarks
		AUTO mode 1) (AUTO MANUAL)			MANUAL mode (AUTO MANUAL)			AUTO ○ 1) PAL ○ MESECAM ○ SECAM ○ NTSC 3.58 ○ NTSC 4.43 ○	
		PAL NTSC MESECAM/SECAM	MESECAM SECAM	NTSC 3.58 4.43	PAL NTSC MESECAM/SECAM	MESECAM SECAM	NTSC 3.58 4.43		
Off-air recording	PAL	*	*	*	PAL	*	*	PAL	
	SECAM	*	MESECAM	*	MESECAM/ SECAM	MESECAM	*	MESECAM	To produce MESECAM tapes.
			SECAM			SECAM		SECAM	To produce SECAM tapes.
	NTSC	*	*	*	NTSC	*	*	NTSC 3.58	
Camera recording	PAL	*	*	*	PAL	*	*	PAL	
	SECAM	*	MESECAM	*	MESECAM/ SECAM	MESECAM	*	MESECAM	To produce MESECAM tapes.
			SECAM			SECAM		SECAM	To produce SECAM tapes.
	NTSC	*	*	*	NTSC	*	*	NTSC 3.58	
Tape-to-tape transfer	PAL	*	*	*	PAL	*	*	PAL	
	MESECAM/ SECAM	*	MESECAM	*	MESECAM/ SECAM	MESECAM	*	MESECAM	To produce MESECAM tapes.
			SECAM			SECAM		SECAM	To produce SECAM tapes.
	NTSC (played on NTSC 3.58 MHz machine)	*	*	*	NTSC	*	*	NTSC 3.58	
	NTSC (played on NTSC 4.43 MHz machine)	*	*	*	NTSC	*	*	NTSC 4.43	
Playback	PAL	*	*	*	PAL	*	*	PAL	
	MESECAM	*	*	*	MESECAM/ SECAM	*	*	MESECAM	
	SECAM	*	*	*	MESECAM/ SECAM	*	*	SECAM	
	NTSC (to be viewed on 3.58 MHz monitor)	*	*	NTSC 3.58	NTSC	*	NTSC 3.58	NTSC 3.58	
	NTSC (to be viewed on 4.43 MHz monitor)	*	*	NTSC 4.43	NTSC	*	NTSC 4.43	NTSC 4.43	

*The position of a switch so marked is irrelevant.
1) In the AUTO mode, the AUTO indicator remains lit as well as the one indicating the system.

Note:
- With (CCIR) B/W signal input, or when a (CCIR) B/W tape is played back in the AUTO mode, the PAL indicator will light. The NTSC 4.43 indicator will light when EIA B/W signals are being input, and either the NTSC 3.58 or 4.43 indicator will light, depending on the setting of the NTSC 3.58/4.43 switch, during playback of EIA B/W tapes.

CLOCK SETTING

Plug the recorder into an AC outlet. The display shows a blinking SUN 0:00.

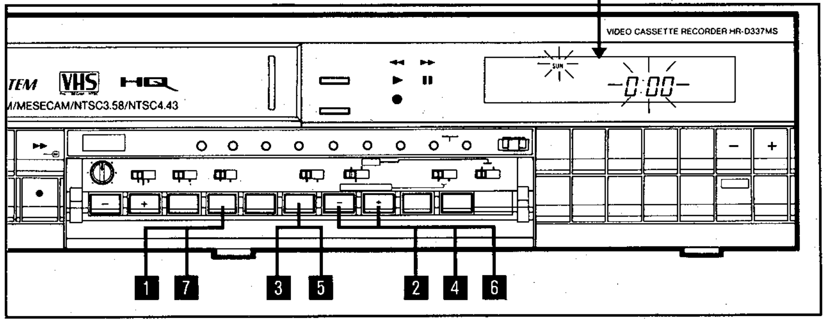

1. Press CLOCK ADJUST ㉒ . The indicated day will blink.
2. Press SET ㉕ until the correct day indication appears.
3. Press SELECT ㉔ . The indicated hour digits will blink.
4. Press SET until the correct hour indication appears.
5. Press SELECT. The indicated minute digits will blink.
6. Press SET until the correct minute indication appears.
7. Press CLOCK ADJUST at the exact instant of the time signal and clock will be set accurately to the present time.

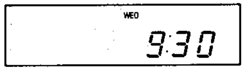

Note:
- Clock setting is not possible in the timer recording standby mode. First check to see that the TIMER indicator on the FDP is not lit.

Power failure indicator
The blinking SUN 0:00 (initial condition of the display) is also a power failure indicator, showing that there has been a power failure exceeding 10 seconds. Re-adjusting the time restores the normal condition of the clock display.

LOADING AND UNLOADING A CASSETTE

Loading
Insert a cassette as illustrated. Be sure to insert it firmly into the slot; otherwise, it will be automatically ejected.

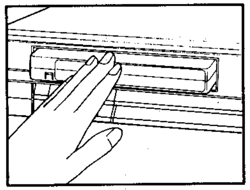

- The automatic loading mechanism will operate only when the cassette is inserted correctly.
- With a cassette inserted, the "cassette loaded" indicator will appear on the FDP.

Unloading
Press the EJECT button ② .

CAUTION
- If unloading of the cassette is not possible, check to see whether the TIMER indicator is lit. If so, press the TIMER button so the TIMER indicator extinguishes.
- Do not attempt to pull out the cassette once automatic loading has started.
- Do not insert fingers or any foreign object beyond the door of the cassette loading slot, as this could lead to injury or damage to the mechanism. Show special caution with children.

AUTO POWER-ON AND AUTO PLAY SYSTEM
- The cassette can be loaded even when the power has not been turned on. Inserting a cassette into the loading slot turns the power on automatically.
- Inserting a cassette, with its safety tab removed, turns the recorder on and playback of the cassette begins automatically.

POWER-OFF EJECT SYSTEM
- The cassette can be unloaded even after the power has been turned off. Pressing the EJECT button turns the power on automatically and, after ejection of the cassette, shuts it off automatically.

OPERATING THE BUILT-IN TUNER

The HR-D337MS incorporates a voltage synthesized tuner with 32-channel preset capacity. Only channels stored can be called up with the CH buttons in modes other than Channel Set.

In the Channel Set mode, all channel numbers including skipped ones are successively displayed so that they can be stored or skipped.

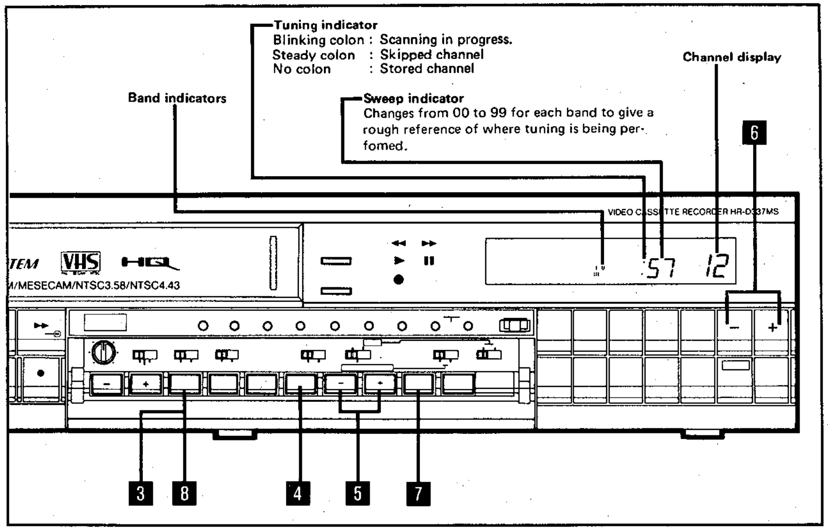

Storing channels
1. Turn on the TV receiver and adjust it to your video channel.
2. Turn on the recorder.
   - If "AU" is in the channel display, press one of the numeric keys to change it to any number.
3. Press CH SET ㉑ .
4. Press SELECT ㉔ until the correct band indication appears.
5. Press CH SEARCH ㉕ until the desired broadcast signal is detected; use either the "-" or "+" button depending on the direction of search.
   - The tuning indicator "colon" will blink and the sweep indicator will count down or up.
6. Press CH ⑮ to select the channel to be stored.
7. Press STORE ㉖ . The "colon" will disappear.
   - Repeat steps 4 through 7 for all necessary channels.
8. Press CH SET to disengage the Channel Set mode.

Skipping channels
1. Press CH to select the channel to be skipped.
2. Press CH SET.
   - The band indicator and the sweep indicator corresponding to the broadcast stored in that channel will appear.
3. Press SKIP ㉗ . The steady "colon" will appear.
4. Press CH SET to disengage the Channel Set mode.

Scanning channels
Stored channels can be called up in ascending or descending order by using CH buttons ⑮ on the recorder or the CHANNEL buttons ㉞ on the remote control.

Selecting channels
By using the numeric keys ㉙ , ㉝ , direct-access channel selection is also possible.
- When using the 10 numeric keys, pay attention to the following: When 1, 2 or 3 is entered, it blinks for about 2 seconds. To set channel 1, 2 or 3, let it blink until it remains lit. To key in a two-digit number, enter the 2nd number while 1, 2 or 3 is blinking. The number entered first will be shifted to the tens place and channels 10 to 32 can be set. Invalid numbers (larger than 32) will be rejected.

Channel coverage and Available channels in each band

Band indicator	Frequency	Europe ch	USA ch	Japan ch
I	VHF band I (44 – 103 MHz)	E2 – E4 S1 – S10	2 – 6	1 – 2
III	VHF band III (102 – 300 MHz)	E5 – E12 S11 – S20	7 – 13 CABLE ch A – I J – W	3 – 12
U	UHF band (470 – 870 MHz)	E21 – E69	14 – 79	13 – 62

Note:
- It might happen for some reason in NTSC areas that channel searching does not function properly if colour system selection is in the AUTO mode. In such cases, before searching, set the AUTO/MANUAL switch to MANUAL, and the PAL/MESECAM-SECAM/NTSC switch to NTSC.

Confirm the settings of the colour system select switches by referring to the chart on page 10.

Mode indicator

PLAY: ▶	STILL: SLOW: ▶ ❚❚
REW SHUTTLE SEARCH: ◀◀ ▶	FF SHUTTLE SEARCH: ▶▶ ▶
REW: ◀◀	FF: ▶▶

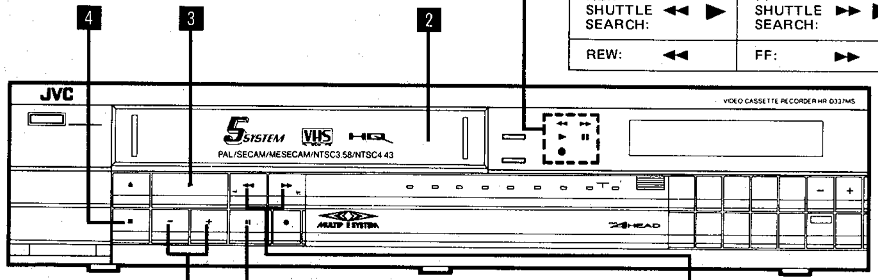

1. Turn the TV receiver on and adjust it to your video channel.
2. Load a pre-recorded cassette.
   - Power will be switched on automatically.
   - When the cassette loaded has no safety tab, playback will start automatically.
3. Press PLAY ❸.
   - The TAPE SPEED switch may be in either position. The SP, LP or EP mode recording is automatically detected and played back at a correct speed respectively with the corresponding indicator lit.
4. Press STOP ⓰ at the end of the programme.
   - The tape will be rewound automatically when its end is reached and the recorder will enter the Stop mode.

SHUTTLE SEARCH

Shuttle Search allows high-speed playback at 9 times (PAL/SECAM)/7 times (NTSC) normal speed in either direction.

1. Press either REW or FF SHUTTLE SEARCH ❹ during playback.
2. To cancel the Search mode, press PLAY.
   - No pictures in Shuttle Search of NTSC LP recordings.
   - Colours disappear in Shuttle Search of MESECAM LP recordings.
   - For briefer scanning, keep the SHUTTLE SEARCH button pressed for more than 2 seconds; when you release the button, the Search mode will be cancelled.

SLOW-MOTION PLAYBACK

- Press the "-" button while in the Play or Still mode; slow-motion playback at 1/30 normal speed will start.
- Press the "+" button while in the Play or Still mode; slow-motion playback at 1/6 normal speed will start.
- Each time the "-" button is pressed, the tape speed becomes slower.
- Each time the "+" button is pressed, the tape speed becomes faster.

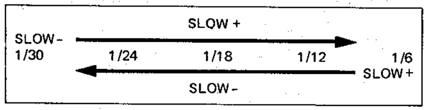

Notes:
- No pictures in slow-motion playback of LP/ EP recordings.
- With some video cassettes, the TV picture may distort during slow-motion playback. This is not due to any defect of the unit.

STILL PICTURE

1. Press PAUSE/STILL ⓲ during playback.
2. To advance the still picture, press PAUSE/STILL a number of times.
   - Keeping this button pressed continuously advances the picture to give a slow-motion effect.
3. To cancel the Still mode, press PLAY.

Notes:
- No pictures in still playback of LP/EP recordings.
- When the Still mode continues for longer than about 5 minutes, the Stop mode will be entered automatically.
- With some televisions, the still picture may be unstable. This is not due to any defect of the unit.

Note:
- Colours may slightly flicker with playback of NTSC EP recordings.

Picture Sharpness Adjustment

Images on the screen can be adjusted to a preferred softer or sharper definition by turning the PICTURE SHARPNESS control ❺ in the corresponding direction.

Tracking Adjustment

Noise bars may appear on the screen if you play back a tape which was recorded using another recorder. For correction, press either TRACKING control ⑳. Tracking will be reset to the preset standard each time the cassette is ejected. Use the same control for correction of the tracking in slow-motion playback.

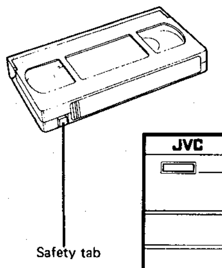

Confirm the settings of the colour system select switches by referring to the chart on page 10.

Mode indicator

RECORD:	● ▶
RECORD PAUSE:	● ▶ ❚❚

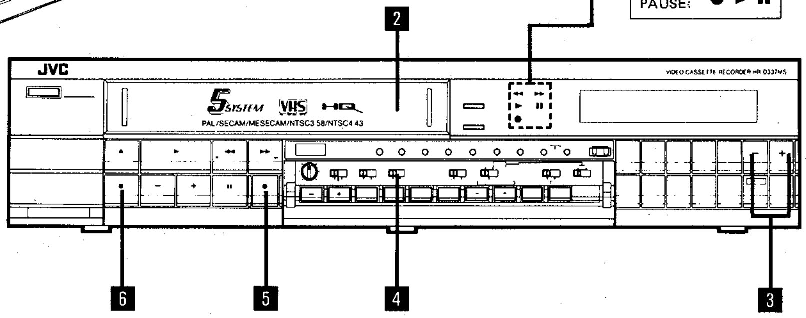

1. Turn the TV receiver on and adjust it to your video channel.
2. Load a cassette (with safety tab in place).
   - Power will be switched on automatically.
3. Press either CH ⓯ or the numeric keys ㉙ to select the channel you wish to record.
4. Select the recording speed (SP or LP/EP (NTSC)).
   SP: 4 hours with an E-240 cassette (PAL/SECAM)
   2 hours and 40 minutes with a T-160 cassette (NTSC)
   LP: 8 hours with an E-240 cassette (PAL/SECAM)
   EP: 8 hours with a T-160 cassette (NTSC)
5. Press REC/ITR ⓳ to start recording.
   - Be careful to press REC/ITR only once, or Instant Timer Recording will begin.
   - Press REC and PLAY simultaneously when using the remote control unit.
   - If there is part of the programme you don't want to record, press PAUSE/STILL ⓲. A white horizontal bar will appear on the screen, which reduces in size in 4 steps as time elapses. When the last quarter starts blinking and disappears, the Stop mode will be entered automatically. The pause duration is possible for about 5 minutes.

Pause mode indicator

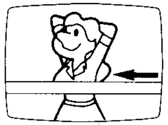

   - To continue recording from the Pause mode, press PLAY ❸ while the white bar is on-screen.
6. Press STOP ⓰ at the end of the programme.
   - When the end of the tape is reached during recording, the tape is automatically rewound and stops.

Notes:
- If you want to start recording from the Play mode, first engage the Record-Pause mode by pressing REC/ITR and PAUSE/STILL simultaneously and then press PLAY.
- When recording is restarted from the Pause mode, a few frames recorded before are erased due to overlap of the new recording. This is not due to any defect of the unit.
- The selected channel cannot be altered during recording. If you wish to change the channel, first engage the Pause mode and then select a different channel.

INSTANT TIMER RECORDING

If you wish for recording to stop automatically after a certain period of time, use this Instant Timer Recording mode.

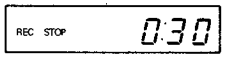

1. Press REC/ITR during recording (or twice if in the Stop mode).
   - The FDP shows "REC STOP 0:30", showing that recording will automatically stop and power will switch off after 30 minutes.
2. Adjust the switch-off time, if necessary.
   - Press REC/ITR to increase it in 30-minute increments (possible up to 4 hours).
   - Use SELECT and SET to set to a more precise time when required (possible up to 8 hours 59 minutes). After setting the time, press SELECT so that all digits stop blinking.

RECORDING ONE PROGRAMME WHILE WATCHING ANOTHER

A programme not being viewed can be recorded while you enjoy another programme.
- Select the channel you wish to record with the recorder's CH buttons.
- Select the channel you wish to view with the TV receiver's channel selector.

INDEX SEARCH AND COUNTER SEARCH

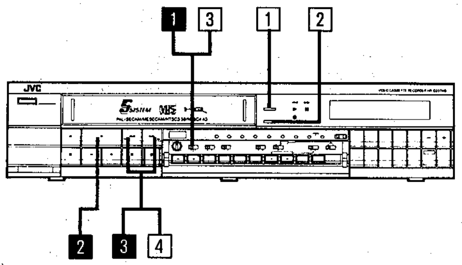

VHS Index Search System

When you start recording from the Stop or Timer Stand-by mode, an index code is marked on the tape. These index codes can be detected in the Shuttle Search mode.

1. Set TAPE MEMORY ❻ to INDEX.
2. Press PLAY ❸ to start playback.
3. Press REW or FF SHUTTLE SEARCH ❹ depending on the direction of search.
   - While the tape is being scanned, "INDX" will be displayed on the FDP.
4. When the first index code is detected, normal playback resumes automatically. To search for the next index code, press the same button once again.

Counter Search

The counter reading of "0000" can be located automatically.

[1] Press COUNTER/LAP/CLOCK ⓫ to obtain the Counter mode.
[2] Press COUNTER RESET ❿ during playback or recording at a point which you wish to locate later.
[3] Set TAPE MEMORY to COUNTER.
[4] Press REW or FF when you need to return to the designated point.
- The tape will stop automatically at about "0000".
- When used in conjunction with the Memory Play function, this offers more convenience. See page 16.

ELAPSED RECORDING TIME INDICATOR

The tape counter is switchable to the elapsed recording time indicator.

1. Press COUNTER/LAP/CLOCK to obtain the Lap mode.
   - The lap time is counted up to 9 hours 59 minutes.
2. To reset the lap time to "0 : 00", press COUNTER RESET.

Notes:
- Unless the COUNTER RESET button is pressed in the Lap mode, the count is maintained even after the power is switched off (as long as the unit remains plugged in to an AC outlet).
- When the Lap mode is engaged during playback, counting does not take place, even though the current count is displayed.

COUNTER GO-TO FUNCTION

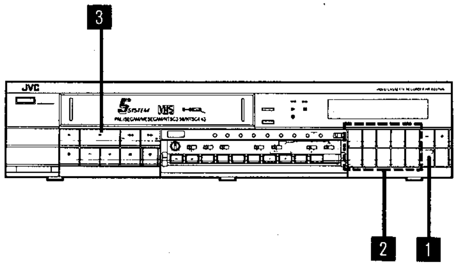

Counter Go-To

Specify the desired counter number, and the tape will be fast-forwarded or rewound to that point for automatic playback.

1. Press GO-TO ㉚ in the Stop mode.
   - The counter will display the current position of the tape as calculated from the leader at the beginning of the tape.
2. Specify the counter number of the point you wish to locate, using the numeric keys ㉙ .
3. Press PLAY ❸ .
   - The tape will be fast-forwarded or rewound depending on the relative position of the specified point, at which playback will start automatically.

Notes:
- If the recorder has not detected the leader tape since the tape was loaded, no number will be displayed when the GO-TO button is pressed, but after pressing the PLAY button, the tape will be rewound to the beginning (to enable counting from the leader) before fast-forwarding to the desired location.
- If the specified number exceeds the length of the tape, as calculated from the leader, the tape will fast-forward to the end, rewind to the beginning and then enter the Play mode.

NEXT-FUNCTION MEMORY

Memory Play function

- If you want to watch the tape from its beginning after rewinding, press REW and then PLAY within 2 seconds. Playback will start automatically at the beginning of the tape. (The TAPE MEMORY switch ❻ must be in the OFF position.)
- If you want to watch the tape from the counter reading of "0000", set TAPE MEMORY to COUNTER, press REW (or FF) and then PLAY within 2 seconds.
- While the tape is being rewound, the PLAY indicator is blinking. To cancel the Memory Play mode and go to another mode, press the corresponding button (STOP, PLAY, FF, REW).

Memory Eject/Power-Off/Timer Standby

If you are going to eject the cassette, turn the power off or engage the Timer Standby mode after rewinding the tape, you do not have to wait for completion of rewind to press the corresponding button.

- To eject the cassette after rewind, peess REW and then EJECT within 2 seconds. (To cancel the Memory Eject mode, press STOP.)
- To turn the power off after rewind, press REW and then OPERATE within 2 seconds. (To cancel the Memory Power-off mode, press OPERATE.)
- To engage the Timer Standby mode after rewind, press REW and then TIMER within 2 seconds. (To cancel the Memory Timer Standby mode, press TIMER.)

Memory Play	REW/FF	→	PLAY	PLAY Blinking	→	Play mode
Memory Eject	REW	→	EJECT	Blinking	→	Cassette ejected
Memory Power-off	REW	→	OPERATE	OPERATE Blinking	→	Power off
Memory Timer Standby	REW	→	TIMER	TIMER Lights	→	Timer standby mode

within 2 seconds

AUTOMATIC TIMER RECORDING

First of all, load a cassette (with safety tab in place); power will be switched on automatically.

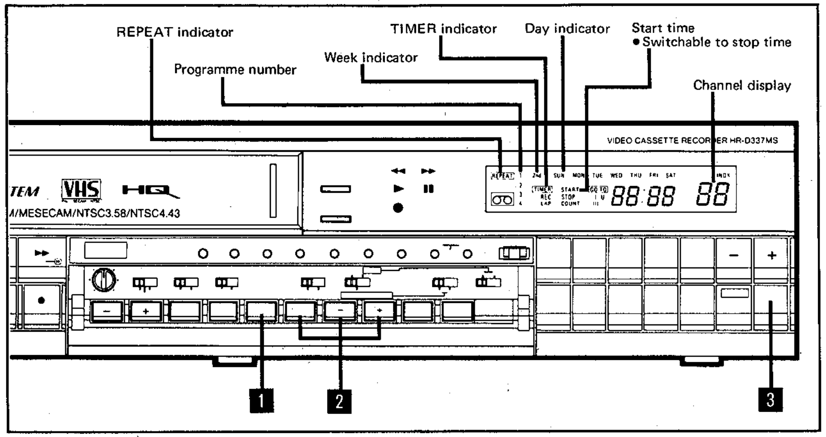

1 Press PROG ㉓.
- The display will change to the Timer Set mode for programme number "1". To advance to programme number 2, 3 or 4, press PROG.

2 Set the day, start time, channel and stop time in succession by using the SELECT and SET buttons ㉔ ㉕ alternately.
- Select the item to be set with the SELECT button; the selected item will blink.
- Set the desired data with the SET buttons.

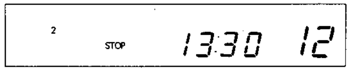

3 After making sure that the cassette is loaded, press TIMER ㉛.
- The Timer Recording Standby mode will be engaged with the TIMER indicator and the preset programme number(s) illuminated and the power turned off.
- With no cassette loaded, the TIMER and "cassette loaded" indicators will continue blinking.
- A cassette whose safety tab has been removed will be ejected automatically.
- If a preset programme contains errors, that programme number will not be illuminated. Recheck the programmed data.
- If illuminated programme numbers are blinking, the time spans of those programmes overlap. Recheck their programmed data.

Setting the day
- With the SET "+" button, the day indication advances from "SUN" (first Sunday) to "SAT" (first Saturday), then "2nd SUN" (second Sunday) to "2nd SAT" (second Saturday) and then the all-days indication with "REPEAT" for daily serial recording.
- For weekly serial recording, press the REPEAT button any time in the Timer Set mode.
- The "REPEAT" entry can be cancelled by pressing the REPEAT button.

Setting the start and stop times
- It is not possible to set the start and stop times unless the clock has previously been set.
- Enter the data while the digits are blinking.
- The stop time can be set within 24 hours from the start time.

Cancelling the preset data
- The preset programmes can be cancelled. First engage the Timer Set mode for the programme number you wish to cancel and then press the CANCEL ㉗ button.

Note:
- The 1st week refers to the seven-day period from the present day and the 2nd week, to the following seven-day period (not weeks on the calendar). These two weeks are counted from the time of setting.

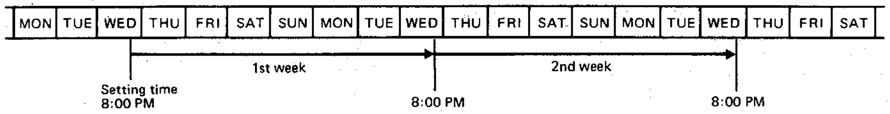

Reviewing the programmed data
- Press the PROG button in the Timer Standby mode; the programmed data of the earliest-to-start programme will be shown for 6 seconds (3 seconds for START and 3 seconds for STOP) and then those of subsequent programmes, if any, in the same manner.

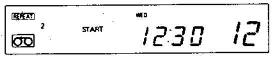

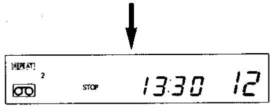

- If you wish to change the programmed data, engage the Timer Set mode (first press the TIMER button to disengage the Timer Standby mode and then press the PROG button) and call up the corresponding programme number for reprogramming.

Timer recording operation
- When the preset start time is reached, recording starts.
- After timer recording, the power is switched off. If the tape end is reached during timer recording, the cassette is automatically ejected and the power is switched off.
- After all preset programmes have been executed, the Timer Standby mode is cancelled.

RECORDING FROM AN EXTERNAL SOURCE

By connecting an external video source (such as a VideoMovie camera-recorder, 2nd video recorder, video camera, etc.) to the VIDEO IN, AUDIO IN connectors, recording and/or editing are possible.
- For connection of these units, an appropriate cable is necessary.
- For connection of a video camera, a camera adapter is also necessary. Connect the camera adapter's PAUSE terminal to the recorder's PAUSE connector (54), then you can control taping start/stop with the camera's start/stop switch. For proper connection of a camera, consult a JVC dealer.

1. Turn the power on for all connected equipment.
2. Adjust the TV receiver to your video channel.
3. Load a cassette.
4. Press either CH button ⑮ or the numeric key 0/AUX ㉙ to obtain "AU" in the channel display.
5. Set the TAPE SPEED switch ⑨ as required.
6. Operate the source equipment properly.
7. Press REC/ITR ⑲.
8. To stop recording temporarily, press PAUSE/STILL ⑱.
9. To end recording, press STOP ⑯.

Note:
- For the operation of the source equipment, refer to the instruction manual of the relevant machine.

Confirm the signal system of the camera being used and set the colour system select switches correctly to suit the camera. (See page 10.)

IN CASE OF DIFFICULTY

What may initially appear to be trouble is not always a real problem. Make sure first . . . .

Symptoms	Check points
No power is applied to the recorder.	• Is the power cord disconnected? Connect it.
Playback picture does not appear while the tape is running.	• Is the TV receiver's channel selector set to the correct video channel? Set to the RF converter channel.
Picture is normal but no sound.	• Is the SYSTEM select switch set to the appropriate position?
Tape does not run in the Record mode.	• Is the PAUSE/STILL button pressed? Press PLAY to release.
REC/ITR button cannot be engaged.	• Is the cassette improperly loaded? Load it properly. • Is the safety tab broken? Reseal the slot.
Tape stops in the Rewind or Fast Forward mode.	• Is the TAPE MEMORY switch set to COUNTER? Set to OFF.
Tape will not rewind.	• Is the tape already rewound to the end?
Noisy playback picture.	• Adjust with the TRACKING controls.
Pressing PAUSE/STILL during playback brings a still picture (in a frame-by-frame manner) with noise bars.	• Noise bars can be eliminated by pressing the PAUSE/STILL button a few more times.

This recorder contains microcomputers. External electronic noise or interference could cause malfunctioning. In such cases, switch the power off and unplug the power cord. Then plug it in again and check the functions.

HEAD CLEANING

- Picture playback may become blurred or interrupted while the TV programme received is clear. This does not mean that the recorded programme has been erased.
- Dirt accumulated on the video heads after long periods of use causes such problems. In this case, head cleaning requiring highly technical care is necessary.

For head cleaning, consult the nearest JVC dealer.

SECTION 1
MECHANISM ADJUSTMENT

1.1 GENERAL

1.1.1 Precautions

IMPORTANT:

1. Disconnect unit from power before removing or soldering components.
2. When removing a fastener (screw, washer, etc.), be careful not to drop it into the mechanism. If a fastener should be dropped, be sure to retrieve it.
3. The tape transport mechanism has been precisely adjusted at the factory and ordinarily does not require re-adjustment.
4. When removing a part, be very careful not to damage or displace other parts. (Be especially careful with the tape guides and rotary video head drum.)
5. For service procedures that call for operation of the set when the cassette housing is separated from the main-deck, perform as below.

1) Set a sheet of insulated material on the right of the chassis.
2) Remove the cassette housing from the main-deck and place it on the insulated sheet, but do not disconnect the connector from the MAIN PWB.
3) Insert a cassette into the cassette housing. The housing mechanism functions to retract the cassette.
4) Disable the photo transistor sensor (END SENSOR) on the main-deck by applying an opaque cover.
5) The desired modes can be obtained by using the operation switches.

1.1.2 Required test equipment, fixtures and tools

For proper mechanical adjustment, the following test equipment, fixtures and tools are strongly recommended. Without them, a long trial-and-error period would be necessary, resulting in possible damage. In addition, general-purpose tools are required.

1. Test equipment required:

Color television or monitor
Oscilloscope: Wide-band, dual trace, triggered, delayed sweep
Recording tape
Alignment tapes
Signal generator : PAL/SECAM/NTSC color bars, stairstep

JVC alignment tape MH-2/MH-2L MH-1/MH-1L/MH-4 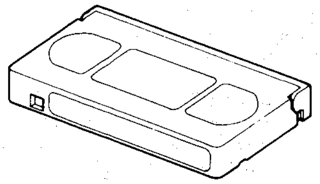	Torque gauge assembly PUJ48075-2 (Torquemeter : 600ATG Torquemeterhead : PUJ48016-2) 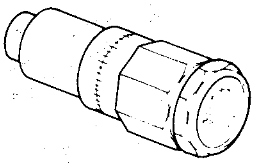	Back tension cassette gauge PUJ48076-2 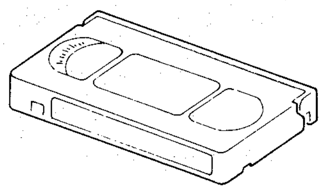
A/CTL head position tool PUJ47351-2 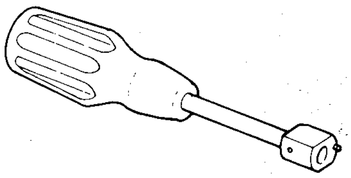		

Table 1-1-1 Fixtures and tools

1.1.3 Disassembly (external covers)

1. Top cover
1) Take out five screws from the right, left and rear sides of the set.
2) Tilt up the rear end of the top cover, then remove the top cover.

2. Bottom cover
1) Take out five screws from the bottom side of the set.
2) Set free the bottom cover from six claws of the chassis in order to remove the bottom cover.

3. Front panel assembly
1) Remove the top cover.
2) Bend three upper hooks of the front panel assembly upward in order to disengage them from their chassis retainers.
3) Disengage three lower hooks of the front panel assembly from their chassis retainers in order to remove the front panel assembly from the chassis.

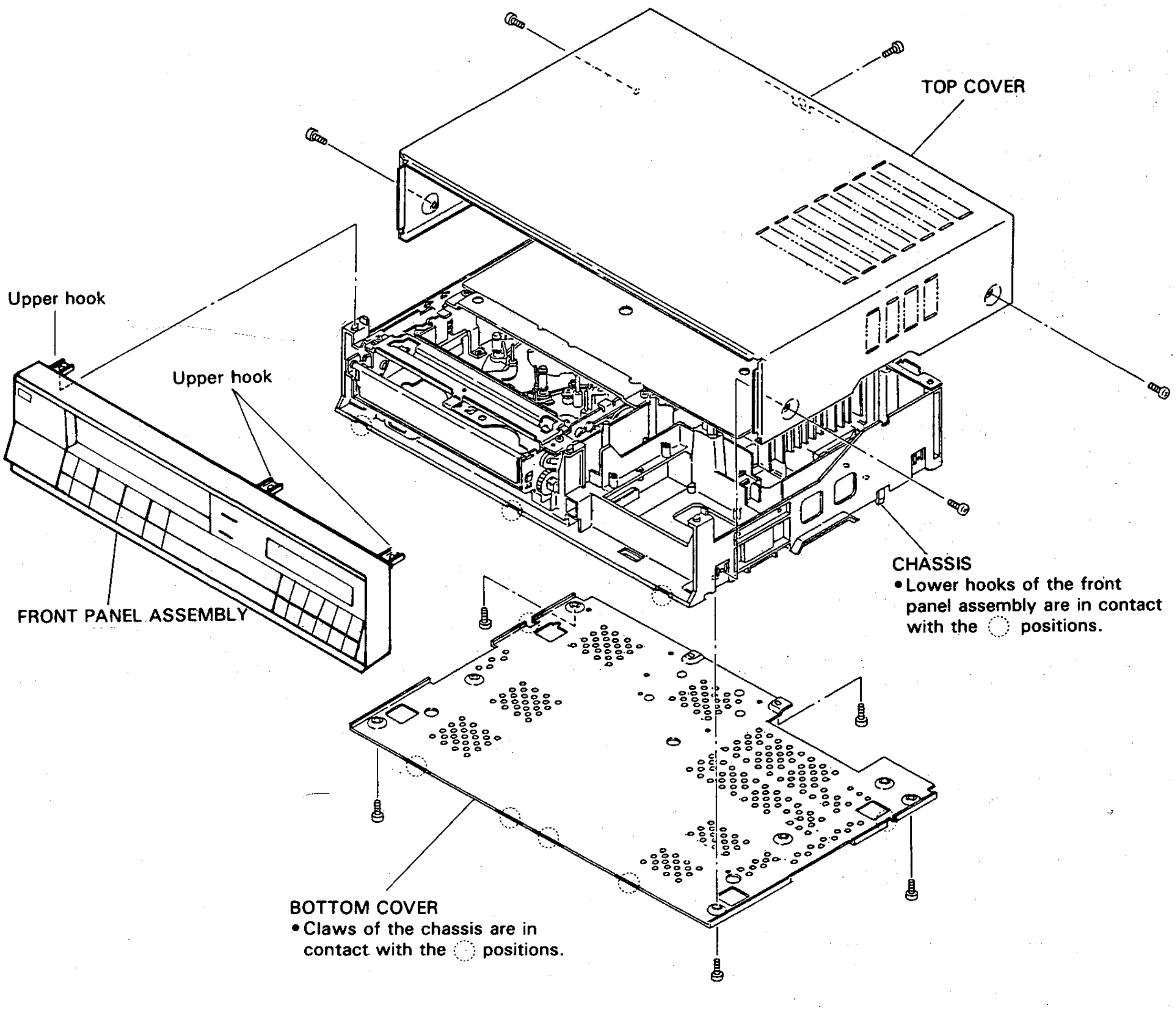

Fig. 1-1-1 Removal of external covers

1.1.4 Layout of main parts

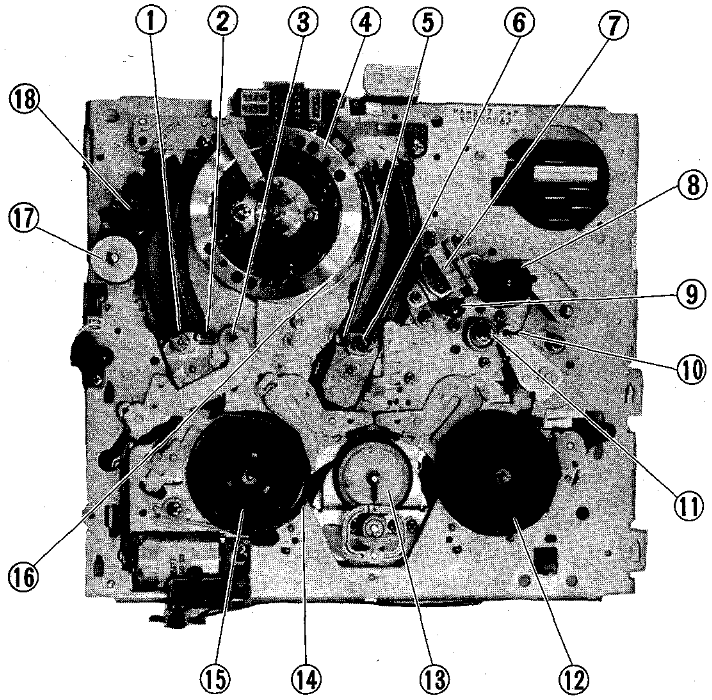

Fig. 1-1-2 Top view of main-deck

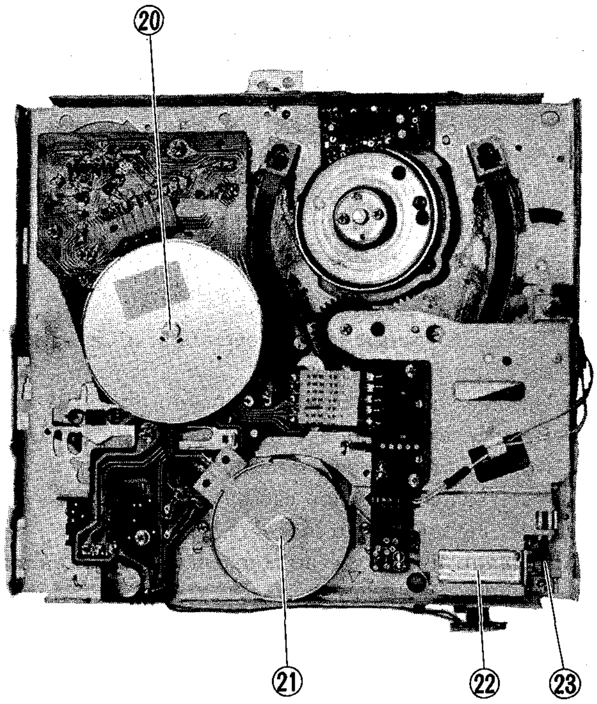

Fig. 1-1-3 Bottom view of main-deck

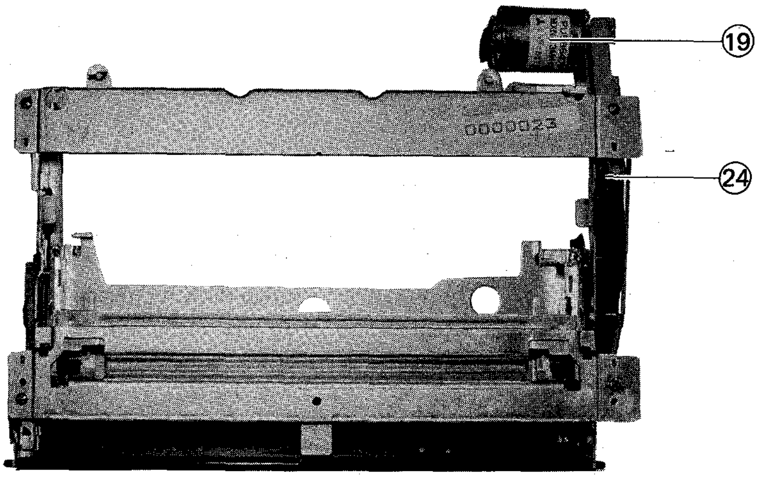

Fig. 1-1-4 Cassette housing

1. Supply guide roller
2. Supply slant pole
3. Tension pole
4. Upper drum
5. Take-up slant pole
6. Take-up guide roller
7. A/C head
8. Pinch roller
9. Take-up guide pole
10. Guide arm
11. Capstan
12. Take-up reel disk
13. Reel idler
14. Tension band
15. Supply reel disk
16. Lower drum
17. Impedance roller
18. Full erase head
19. Cassette motor
20. Capstan motor
21. Reel motor
22. Mode motor
23. Mode belt
24. Cassette belt

1.2 MAIN ASSEMBLY REPLACEMENT

1.2.1 Upper drum assembly

Notes: When handling and installing the upper drum assembly, avoid directly touching the head tips on the upper drum assembly.
For cleaning the head tips, push and hold a lint-free cloth or chamois dampened with alcohol to the upper drum assembly by the fingers, then turn the upper drum assembly clockwise. Do not clean the upper drum assembly with a vertical stroke.

1. Removal
1) Take out a screw and remove the brush assembly from the drum assembly.
2) Unsolder all soldered portions on the DRUM PWB. Remove excess solder, then remove the DRUM PWB from the upper drum assembly.
Note: Soldered portion can be easily removed by removing solder with sucker or wick.
3) Take out two screws and remove the upper drum assembly upwards.

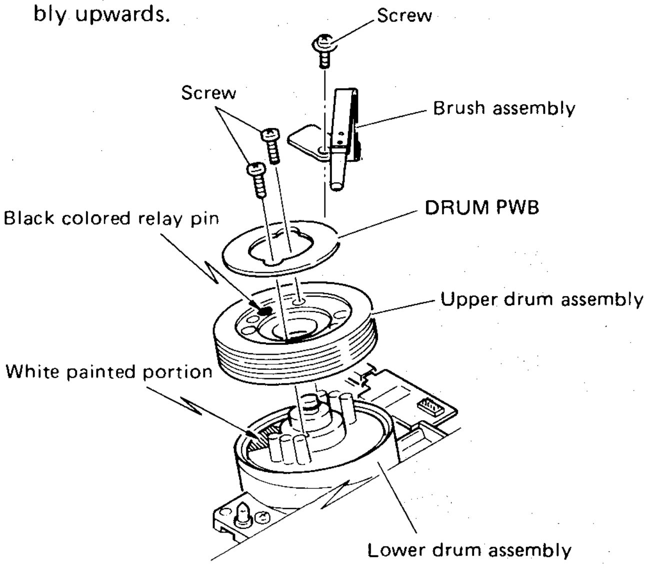

Fig. 1-2-1 Upper drum assembly

2. Installation
1) Install a new upper drum assembly so that the black-colored relay pin of the upper drum assembly overlies the white painted portion of the lower drum assembly, as shown in Fig. 1-2-1.
2) Tighten two screws in a balanced manner.
3) Set the DRUM PWB on the upper drum assembly, then resolder it.
4) Clean the drum unit (particularly clean the upper drum assembly).
5) Mount the brush assembly on the original position, then tighten a screw to fix the brush assembly.

3. Confirmation and adjustment
1) Perform the interchangeability confirmation. Refer to section 1.6.
2) Perform the PB switching point adjustment of the Servo (MAIN PWB) circuit. Refer to section 2.2.1.

1.2.2 A/C head (Audio/control head)

1. Removal
1) Disconnect connectors from the A/C HEAD PWB.
2) Take out two screws, then remove the A/C head and the head base together.
3) Unsolder and separate the A/C HEAD PWB from the A/C head.
4) Take out a screw and remove the shield cap from the A/C head.
5) Take out three screws and separate the A/C head from the head base. Use care regarding springs. Do not lose them.

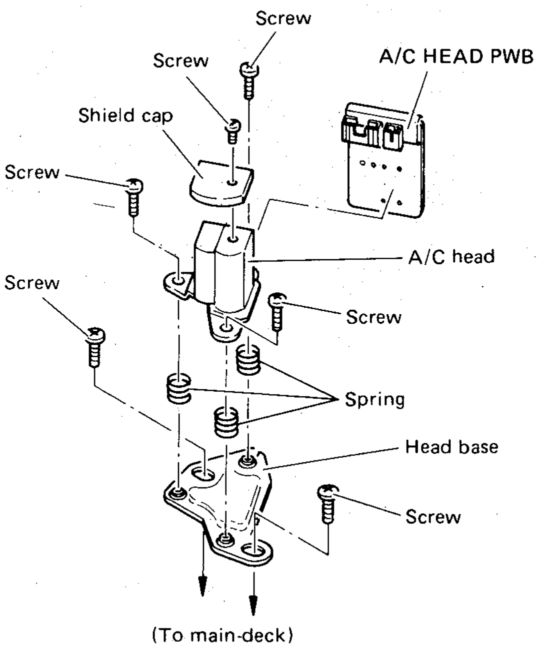

Fig. 1-2-2 A/C head

2. Installation
1) Mount a new A/C head and other peripheral parts on the main-deck by reversing the removal procedure.
2) Before installing the A/C head on the main-deck, perform rough-adjustment of A/C head height as shown in Fig. 1-2-3.

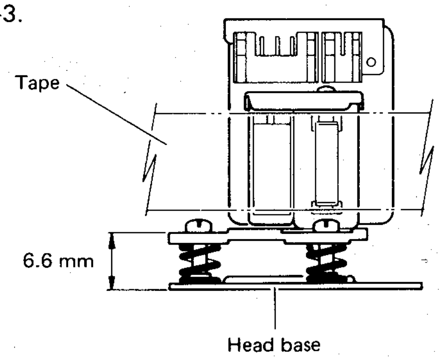

Fig. 1-2-3 A/C head height

3. Confirmation and adjustment
1) Use a recording tape and confirm correct tape transport operation, then perform interchangeability adjustment. Refer to sections 1.5 and 1.6.
2) Perform overall confirmation of the Audio circuit. Refer to section 2.4.

1.2.3 Tension band assembly

1. Removal
1) Take out a screw, then pry the A portion of the tension band assembly upwards to separate it from the tension arm assembly.

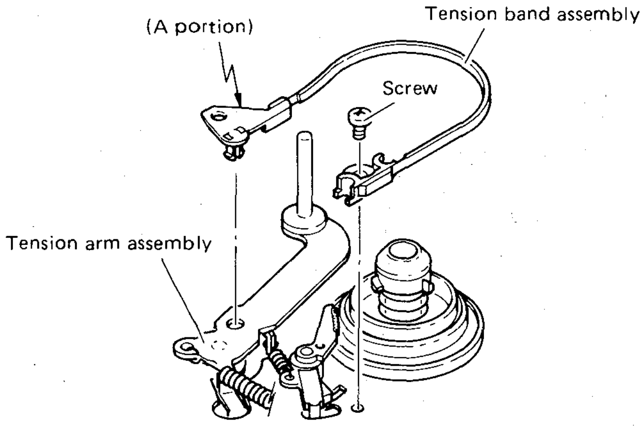

Fig. 1-2-4 Tension band assembly

2. Installation
1) Install a new tension band assembly by reversing the removal procedure.

3. Confirmation and adjustment
1) Perform tension pole position adjustment. Refer to section 1.4.1.

1.3 ASSEMBLY PROCEDURE OF MECHANISM

The mechanism of this model is mostly engaged to the mechanism control circuit, through the mode select switch. Therefore, the relation between the mode select switch and the control arm decides all mechanical movement of the mechanical parts such as levers, gears, rollers and so on. If these parts are not properly positioned, the unit will be unloaded or compulsorily stopped. This will result in damage of mechanical or electrical parts.

1.3.1 Loading arm assembly

Loading arm assembly consists of loading gear, torsion spring and loading arm.

1. Set up the loading arm assembly correctly as shown in Fig. 1-3-1.

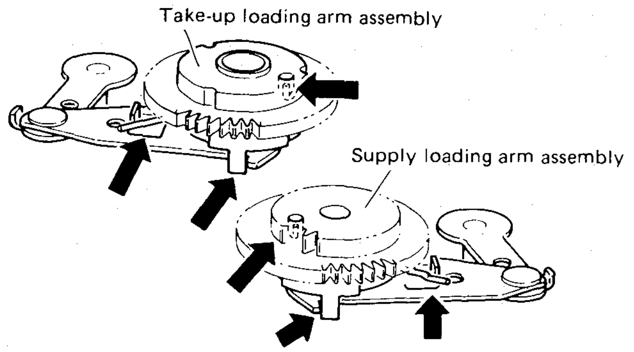

Fig. 1-3-1 Loading arm assembly (1)

2. Install the take-up loading arm assembly and the supply loading arm assembly so that the holes on the loading gears face each other, as shown in Fig. 1-3-2. Do not move the loading arm assemblies from this position for the next step.

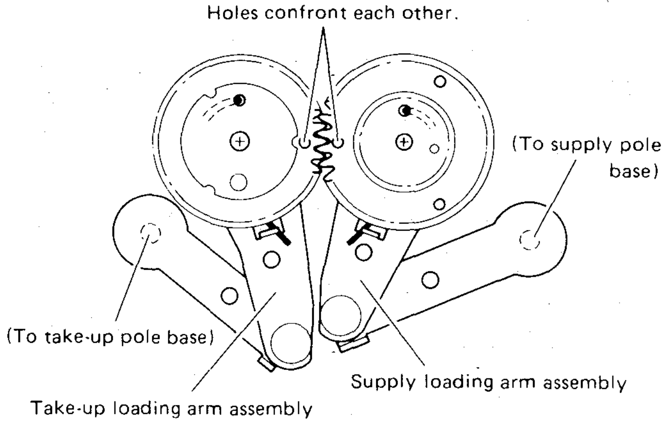

Fig. 1-3-2 Loading arm assembly (2)

1.3.2 Control cam

1. Set the arm gear assembly on the cam bracket assembly so that the hole of the arm gear assembly overlaps the hole of the cam bracket assembly.
2. Install the control cam on the cam bracket assembly so that the hole of the control cam overlaps the hole which is indicated in the step 1), as shown in Fig. 1-3-3. Do not turn the control cam from this position for the next step.

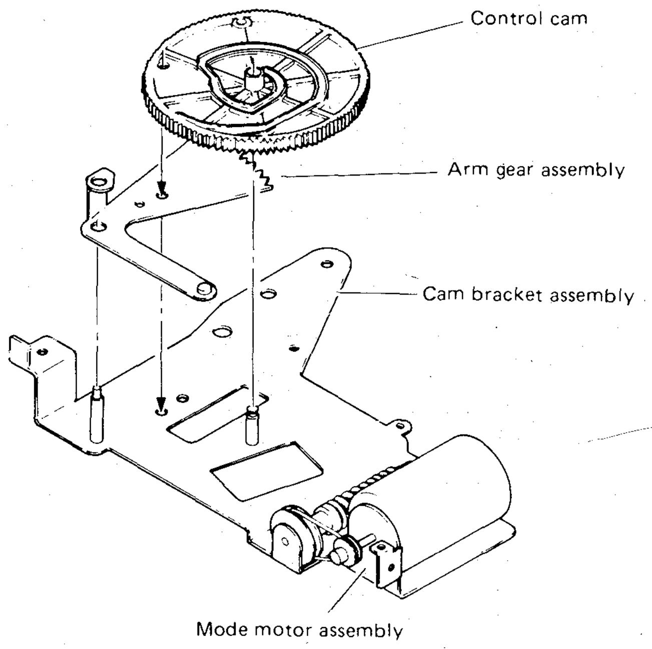

Fig. 1-3-3 Control cam

1.3.3 Cam bracket assembly

1. Push and hold the plate assembly so that the hole of the plate assembly overlaps the hole of the main-deck, as shown in Fig. 1-3-4.
2. Then mount the cam bracket assembly.

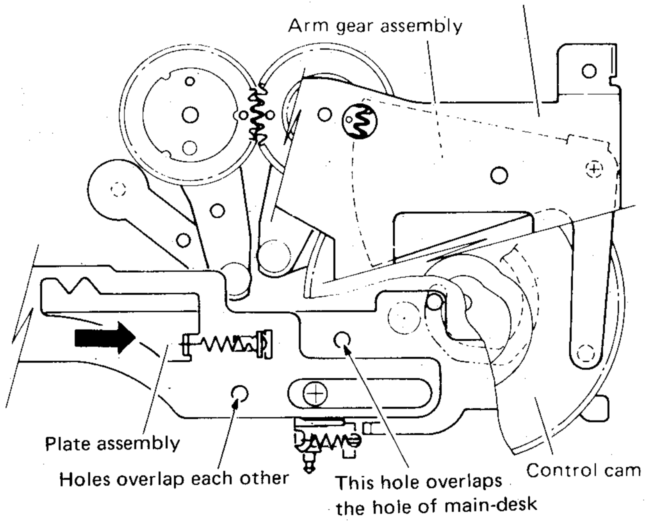

Fig. 1-3-4 Cam bracket assembly

Note: In order to overlap the holes turn the control cam fully counter clockwise by turning the mode motor with a finger.

1.3.4 Mode select switch

1. When the hole of the plate assembly overlaps the hole of main-desk, refer to Fig.1-3-4, confirm that the V-cut of the slider section just overlaps the V-cut of the outer section of the mode select switch.
2. If a difference of more than 0.5 mm is noticed, adjust the mode select switch to the correct position, after unsoldering and loosening the screw.

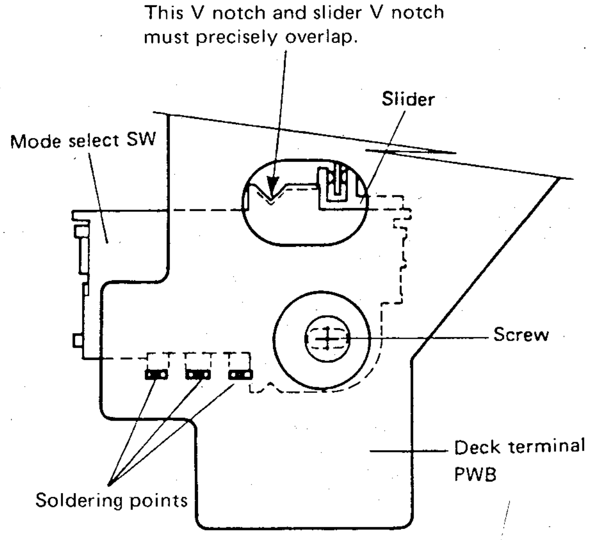

Fig. 1-3-5 Mode select switch

1.4 CONFIRMATION AND ADJUSTMENT

1.4.1 Tension pole position adjustment

1. Without loading a tape, set for the Play mode.
2. Loosen screw a little bit, then adjust the tension band holder so that the distance, shown in Fig. 1-4-1, becomes zero (0 mm).
3. Tighten screw to fix the tension band holder.

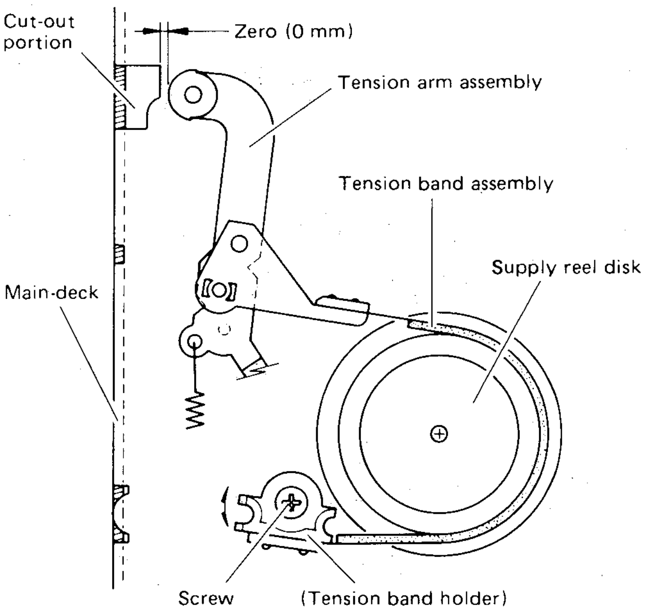

Fig. 1-4-1 Tension pole position

Note: By this adjustment, back tension is within normal specification, in spite of parts tolerances.

4. Use the back tension cassette gauge and set for the Play mode.
5. Confirm that the indication is between 25 – 75.

1.4.2 Take-up torque confirmation

1. Set the Play mode without the cassette housing assembly.
2. Set the torque gauge on the take-up reel disk.
3. The torque gauge consists of upper and lower sections connected by a spring mechanism. Relax the grip on the torque gauge so that the indicator needle and scale rotate at equal speed, then read the indication. The correct value is between 45 – 155.
4. If necessary, replace the take-up and supply clutches.

1.5 TAPE TRANSPORT SYSTEM CONFIRMATION AND ADJUSTMENT

Once adjusted to the complete condition, readjustment of the tape transport system is not necessary, except when the parts that compose the tape transport system are replaced due to troubles by long usage or unexpected accidents.

1.5.1 Tape transport system adjustment

1. Guide roller
   To get the FM envelope into ideal shape for interchangeability, the height adjustment of the guide roller is needed.
   Before turning the guide roller, slightly loosen the setscrew located under the guide roller. For loosening the setscrew, use the hex key (1.25 mm).
   Note: Loosen the setscrew enough to allow the guide roller to be turned. If excessively loose, tape motion may turn the guide roller inadvertently.

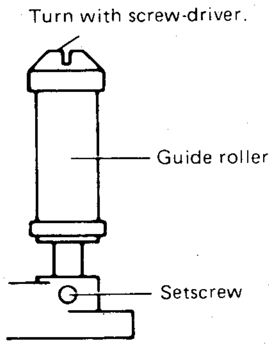

Fig. 1-5-1 Guide roller

2. Impedance roller
   Normally, do not adjust the height of the impedance roller. Only when the defects of tape travel are noted at the impedance roller, after complete adjustment for interchangeability, adjust the height of impedance roller to obtain smooth tape travel. For adjustment of impedance roller height, use the nut-driver (5.5 mm).
   Note: Do not lower the impedance roller excessively to avoid the defects of tape travel. Tape must be along the lower flange located under the impedance roller.

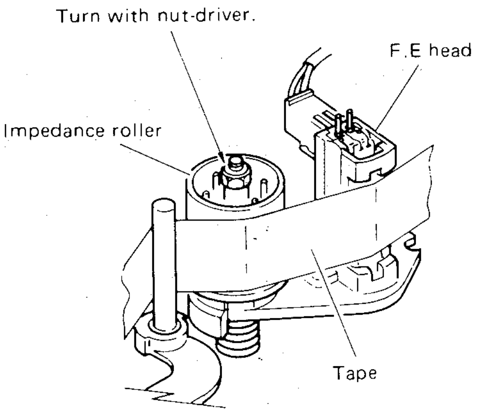

Fig. 1-5-2 Impedance roller

3. A/C head (audio/control head)
   When defects of tape travel are noted at the take-up guide pole, adjust the inclination of A/C head to obtain smooth tape travel.

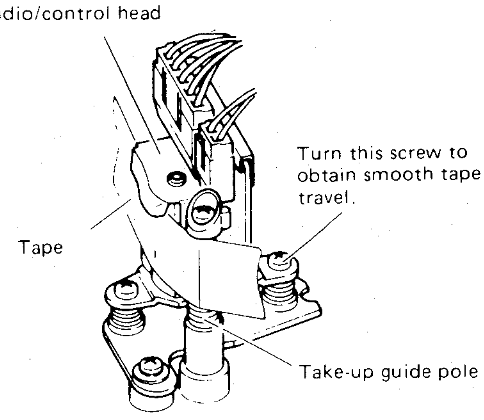

Fig. 1-5-3 A/C head

1.6 INTERCHANGEABILITY CONFIRMATION AND ADJUSTMENT

Before using an alignment tape, use a recording tape and confirm correct tape transport operation.
For the FM envelope output, connect an oscilloscope to TP6 of the PRE/REC. For audio output, connect to the AUDIO OUT terminal, and trigger the oscilloscope externally with the signal from TP11 of the SERVO PWB. Use only the stairstep segment of the alignment tape, do not use another segment for interchangeability.

1.6.1 FM envelope confirmation and adjustment

1. Push the TRACKING +/– buttons to obtain the maximum FM envelope output corresponding to (a) level in Fig. 1-6-1. Observe the FM envelope, read the maximum level (a) and the minimum levels (b), (c) and (d).
   Confirm that:

$$\frac{b}{a} \geq 0.7,\ \frac{c}{a} \geq 0.5 \text{ and } \frac{d}{a} \geq 0.5$$

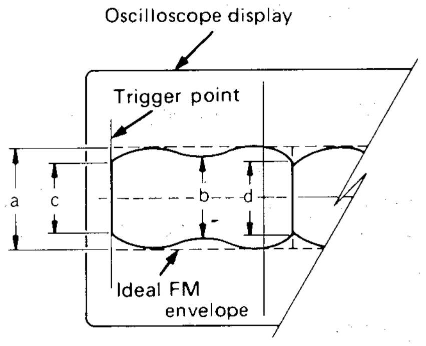

Fig. 1-6-1 FM envelope

2. If defects are noted, following adjustments are required.
1) Observe the oscilloscope display and push the TRACKING +/– buttons to vary the FM output from maximum to minimum.
2) If the variation is not parallel at the rising portion (drum entrance) of the FM envelope, turn the supply guide roller so that the rising portion of the envelope becomes nearly flat, as shown in Fig. 1-6-2.

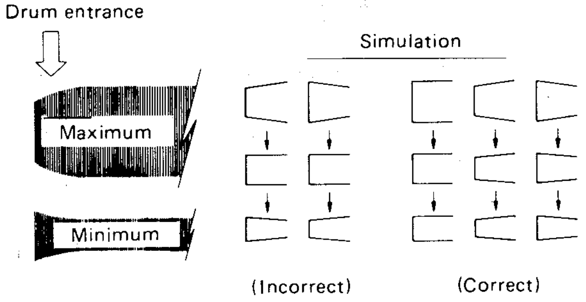

Fig. 1-6-2 Drum entrance

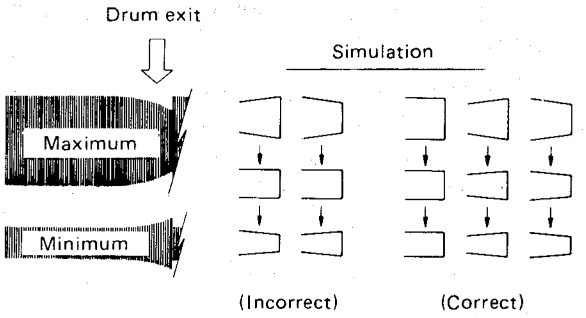

Fig. 1-6-3 Drum exit

3) In the same manner as for the rising portion, turn the take-up guide roller to adjust the falling portion (drum exit) of the FM envelope. See Fig. 1-6-3.
4) In addition to observing the envelope, confirm absence of tape curling or wrinkling at the impedance roller and take-up guide pole. If it occurs at the impedance roller, adjust the impedance roller height. If it occurs at the take-up guide pole, adjust the A/C head inclination.
5) Vary the FM envelope output level and perform fine adjustments of the guide rollers.

1.6.2 A/C head height and azimuth adjustments

Incorrect A/C head height can impair audio signal-to-noise ratio when playing back a pre-recorded tape.

1. For A/C head inclination, adjust screw (A) so that small tape wrinkles are not produced at the take-up guide pole. Turn screw (A) clockwise so that the tape wrinkles are apparent with the lower flange of the take-up guide pole, then turn screw (A) counter-clockwise so that the wrinkles smooth out.
2. Adjust azimuth with screw (B).
   Turn screw (B) to obtain maximum audio output.
3. For A/C head height, turn screws (A), (B) and (C) in succession by small and equal increments at a time and adjust for maximum audio output level.

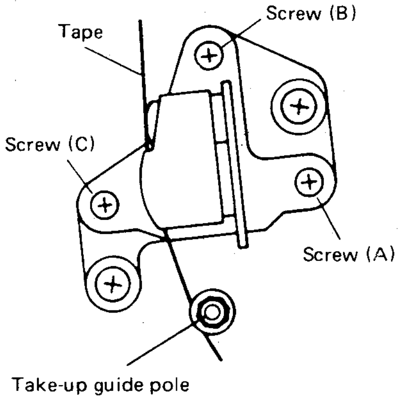

Fig. 1-6-4 A/C head

1.6.3 Control head phase adjustment

1. Set Tracking to Pre-Set Position by pushing both + button and – button at the same time.
2. Loosen screws (D) and (E) a little bit, then cover screw (D) with the A/CTL head position tool and set the pin of the tool into the hole next to screw (D).
3. Turn the tool counter-clockwise to shift the A/C head fully in the direction of the capstan, and then gradually turn the tool clockwise and observe the FM envelope output.
4. Set the A/C head at the point of the first output peak.

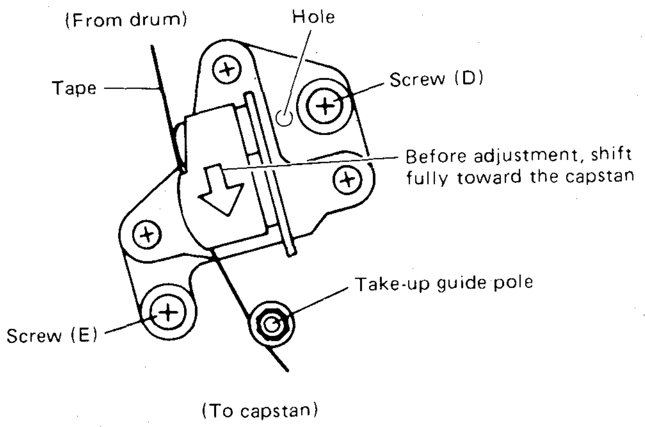

Fig. 1-6-5 Control head phase

1.6.4 Setscrew tightening

1. After confirming absence of tape wrinkling and other transport irregularities, tighten the setscrews located under the guide rollers while in the Stop mode.
   Note: Since the guide rollers are easily moved, use care when tightening.
2. Again perform the FM envelope confirmation.

1.6.5 Final confirmation

1. Supply a video signal and perform recording, then play back.
   Confirm that the FM envelope satisfies the specifications during playback of alignment tape MH-2.
2. Perform the PB switching point adjustment of the Servo circuit. Refer to section 2.2.1.
3. Perform the audio PB level adjustment of the Audio circuit. Refer to section 2.4.2.
4. Perform overall confirmation of the Video circuit. Refer to section 2.3.

SECTION 2
ELECTRICAL ADJUSTMENTS

2.1 PREPARATION

Electrical adjustments are required after replacing circuit components and certain mechanical parts.
It is important to perform these adjustments only after all repairs and replacements have been completed. Also, do not attempt these adjustments unless the proper equipment is available.

2.1.1 Required test equipment

1. Color television or monitor
2. Oscilloscope: wide-band, dual-trace, triggered delayed sweep
3. Frequency counter
4. Audio oscillator
5. Audio voltmeter
6. Digital voltmeter
7. Signal generator: RF/IF sweep/marker
8. Signal generator: NTSC/PAL/SECAM color bar, stairstep
9. Recording tape
10. Alignment tapes: MH-1, MH-1L, MH-2, MH-2L, MH-4

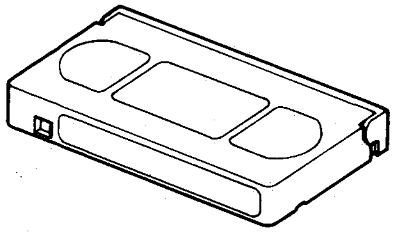

Fig. 2-1-1 Tape

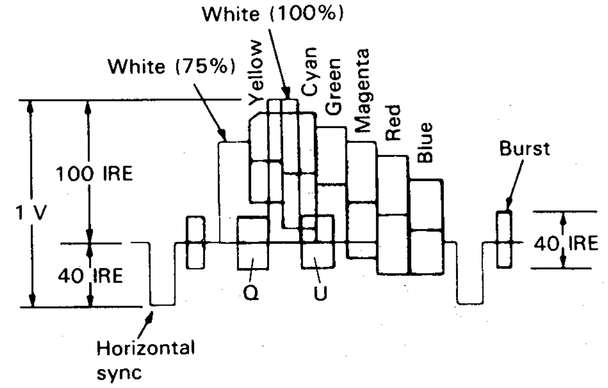

Fig. 2-1-2 Color bar signal waveform

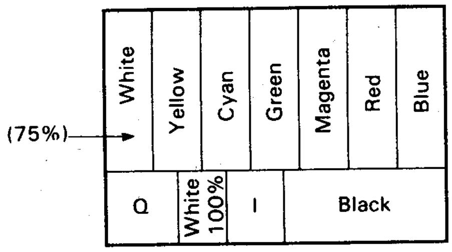

Fig. 2-1-3 PAL/NTSC color bar pattern

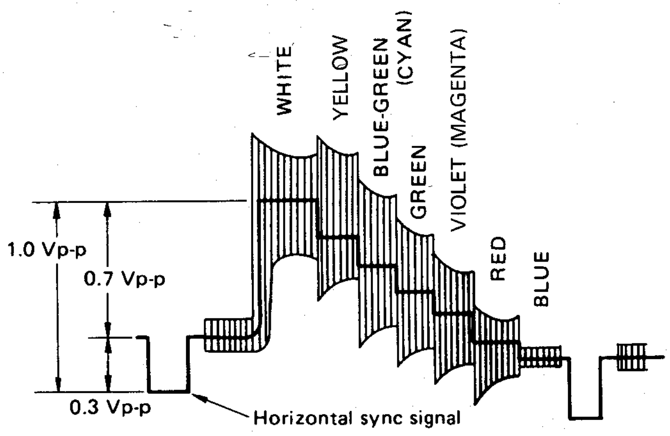

Color bar signal waveform

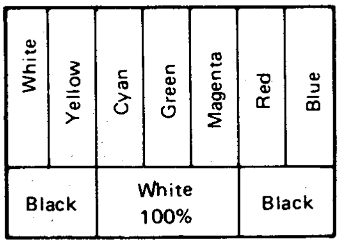

Color bar pattern

Fig. 2-1-4 SECAM color bar

2.2 TIMER CIRCUIT (2 0 TIMER Board)

Note: Unless otherwise specified, test points and variable resistors are located on the TIMER board.

No.	Item	Check Point	Adjustment Parts	Signal & Mode	Description
1	Timer clock	TP2	C101	E-E mode	1) Connect a frequency counter to Pin 16 of IC1 and TP3 (GND). 2) Short TP1 to ground. 3) Reset the CPU by briefly shorting both leads of C10. 4) Adjust C12 for 2,048.000±0.002 Hz. **Note:** Adjust period T for the following value: T=488.2813±0.005 μs

2.3 SERVO CIRCUIT (4 8 SERVO Board)

Note: Unless otherwise specified, test points and variable resistors are located on the MAIN board.

No.	Item	Check Point	Adjustment Parts	Signal & Mode	Description
1	PB switching point	TP11	R4 (PAL) R45 (NTSC)		1) Connect an oscilloscope to VIDEO OUT. Trigger the oscilloscope externally with the signal from TP11. 2) Play color bar signal of the MH-2 alignment tape. 3) Adjust R4 for 6.5±0.5 H. 4) Confirm difference within 1 H between + (plus) and – (minus) slopes. 5) In the same manner, play back MH-1 alignment tape and adjust R45 for NTSC.

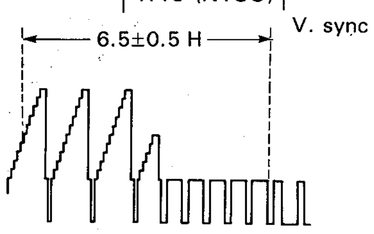

Fig. 2-3-1

2.4 VIDEO CIRCUIT (0 3 MAIN Board)

Note: Unless otherwise specified, test points and variable resistors are located on the MAIN board.

No.	Item	Check Point	Adjustment Parts	Signal & Mode	Description
1	Head Q	TP3, TP4, TP6 (PRE/REC)	R32, R33 (PRE/REC)	LP mode PB without tape	1) Insert a cassette from which tape is absent and set for the LP Play mode. 2) Connect the oscilloscope to TP6 of the PRE/REC board. 3) Supply a sweep signal to TP3 of the PRE/REC board. 4) Adjust R32 to equalize the 1 MHz and 5 MHz levels. 5) In the same manner, apply the sweep signal to TP4 and adjust R33.
2	VXO	TP309	R328	E-E PAL mode	1) Connect a frequency counter to TP309. 2) Adjust R328 for 4.433619 MHz±50 Hz.
3	REC FM level	TP3 (PRE/REC)	R204	LP-PAL mode	1) Set for the PAL, LP mode and supply a PAL color bar signal input. 2) Connect the oscilloscope to TP3 of the PRE/REC board. 3) Record the PAL color bar. 4) Adjust the REC FM waveform for 1.3 Vp-p with R204.

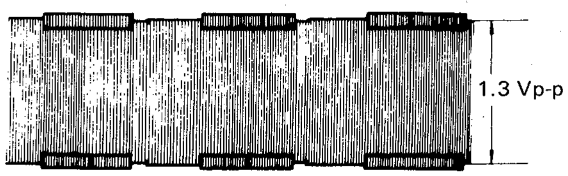

Fig. 2-4-1

No.	Item	Check Point	Adjustment Parts	Signal & Mode	Description
4	SP REC color level	TP307	R639	SP-PAL mode MH-2 REC then PB 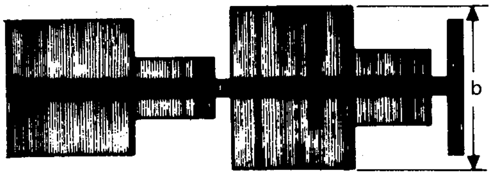 Fig. 2-4-2	1) Play color bar signal of the MH-2 alignment tape. 2) Measure the color level at TP307. 3) Use a spare tape and record a color bar signal. Play it back and measure the color level at TP307. 4) Adjust R639 for 100%±5% color level between the alignment tape playback and the recorded signal playback. **Note:** Confirm CH1 and CH2 level difference within 3 dB.
5	LP REC color level	TP307	R640	LP PAL mode MH-2L REC then PB	1) Repeat the above using the LP mode and the MH-2L alignment tape. 2) Adjust R640 for 90%±5% color level. **Note:** Confirm CH1 and CH2 level difference within 3 dB.
6	Noise cancel	TP121	R112 (PAL) R509 (NTSC)	MH-2 PB MH-1 PB 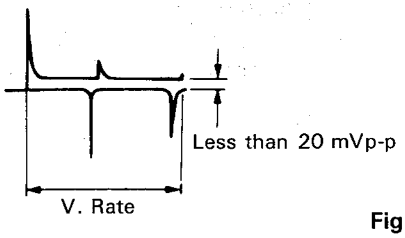 Fig. 2-4-3	1) Play color bar signal of MH-2 alignment tape. 2) Connect the oscilloscope to TP121. 3) Adjust R112 for less than 20 mVp-p noise level. 4) In the same manner, play back NTSC color bar signal of MH-1. 5) Adjust R509 for less than 20 mVp-p.
7	Delay color level	TP416 TP408	R432	LP	1) Record and playback PAL color bar signal in the LP mode. 2) Adjust R432 for equal color level at TP416 and TP408.
8	0.5 H delay video level	TP218 TP231	R223	E-E mode	1) Supply a PAL color bar signal input and set for the EE mode. 2) Adjust R223 for equal Y signal level at TP218 and TP231.
9	Jump detect	TP423	R410 (Jumper detect PWB)	E-E mode	1) Connect a jumper wire between TP433 and TP434. 2) Connect a frequency counter to TP432. 3) Adjust R410 for 30.0±0.2 kHz.
10	Video frequency response	VIDEO OUT	R515	SP PAL mode Video sweep 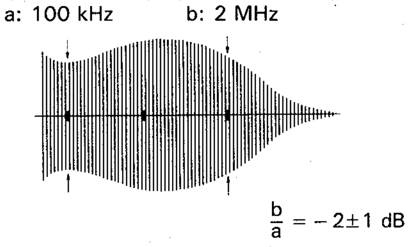 Fig. 2-4-4	1) Record and play back the video sweep signal. 2) Adjust R515 to set the 2 MHz marker to −2±1 dB.
		VIDEO OUT	R517	LP PAL Video sweep	3) Adjust R517 to set same condition as above.

No.	Item	Check Point	Adjustment Parts	Signal & Mode	Description
11	MESECAM DET. (1)	TP314	L351 R355	AUTO mode SECAM Color bar E-E	1) Connect the oscilloscope to TP314. 2) As indicated in the figure, adjust R355 for more than 6.5 Vp-p without waveform distortion. 3) Adjust L351 for maximum waveform. **Note:** Confirm more than 6.0 Vp-p during recording.
	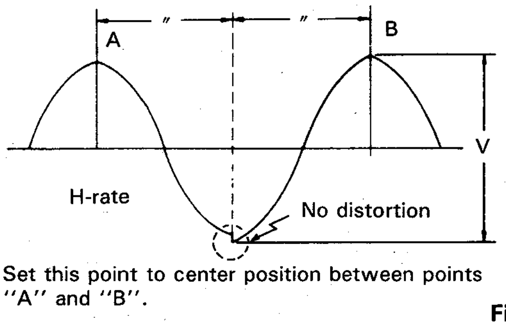 **Fig. 2-4-5**				
12	SECAM SP REC color level	TP207 (Color PWB)	R452 (MAIN PWB)	Color bar (SECAM) REC→PB	1) Play color bar signal of MH-4 Alignment tape. 2) Connect oscilloscope to TP207 and measure the color level. 3) Record and playback color bar signal. 4) Again measure the TP207 signal. Adjust R452 to obtain 140±5% of that from the Alignment tape.
	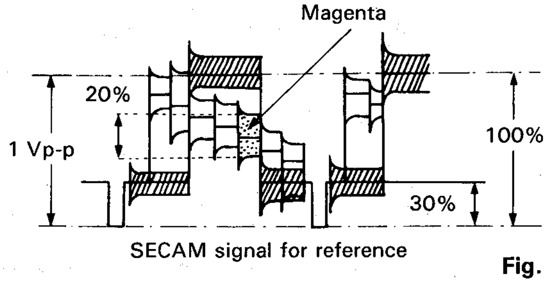 **Fig. 2-4-6**				
13	SECAM LP REC color level	TP207 (Color PWB)	R430 (MAIN PWB)	Color bar (SECAM) REC→PB	1) On the SERVO board, short TP4 and GND. 2) Play color bar signal of MH-4 Alignment tape. 3) Measure the color level at TP207. 4) Disconnect short from TP4. Record and playback color bar signal in LP mode. 5) Again measure the TP207 color level. Adjust R430 to obtain 110%±5% of that from the Alignment tape.
14	SECAM detector	TP214	R255 L251	Color bar (SECAM) E-E REC→PB	1) In the EE mode, adjust L251 to obtain the waveform shown in the figure at TP214. 2) Record and playback color bar signal. Adjust R255 for 6.0±0.5 Vp-p at TP214. Confirm more than 4.0 Vp-p during recording.
	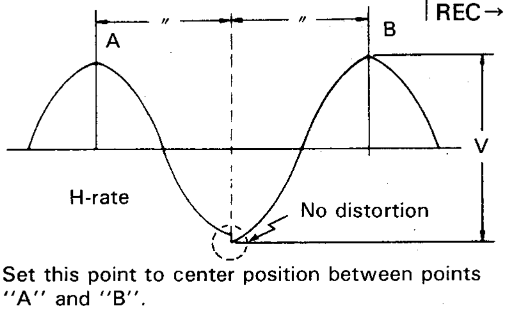 **Fig. 2-4-7**				
15	NTSC SP REC color level	TP107 (Color PWB)	R655 (Color PWB)	MH-1L Color bar REC→PB	1) Play color bar signal of MH-1 Alignment tape. 2) Connect oscilloscope to TP107 and measure the color level. 3) Record and playback color bar signal. Again measure the color level at TP107. 4) Adjust R655 for 95±5% of the color level obtained from the Alignment tape.

No.	Item	Check Point	Adjustment Parts	Signal & Mode	Description
16	NTSC EP REC color level	TP107 (Color PWB)	R656 (Color PWB)	MH-1L Color bar REC→PB	1) Play color bar signal of MH-1L Alignment tape. 2) Connect oscilloscope to TP107 and measure the color level. 3) Record and playback color bar signal in EP mode. Again measure the color level at TP107. 4) Adjust R656 for 90±5% of the color level obtained from the Alignment tape. Confirm channel difference within 4 dB.

2.5 AUDIO CIRCUIT (0 3 MAIN Board)

Note: Unless otherwise specified, all test points and adjustments are located on the MAIN board.

No.	Item	Check Point	Adjustment Parts	Signal & Mode	Description
1	Bias voltage	TP31 TP32	R42	REC	1) Without connecting the input and output terminals, set the input selector switch to AUX. 2) Set for the Recording mode and use a voltmeter to measure the voltage between TP31 and TP32. 3) Adjust R42 to obtain 19 mVrms.

2.6 IF CIRCUIT (0 7 IF Board)

Note: Unless otherwise specified, all test points and adjustments are located on the IF board.

<table>
<tr><th>No.</th><th>Item</th><th>Check Point</th><th>Adjustment Parts</th><th>Signal & Mode</th><th>Description</th></tr>
<tr><td colspan="6">

- **Equipment required**

1. Oscilloscope
2. IF sweep signal generator with suitable markers (PIF, SIF, etc.)
3. DC power supplies—for power bias (12.0 V)
for IF AGC bias (approx. 5 V variable)
4. Sweeper probe (sweep signal supply cable) as shown below.

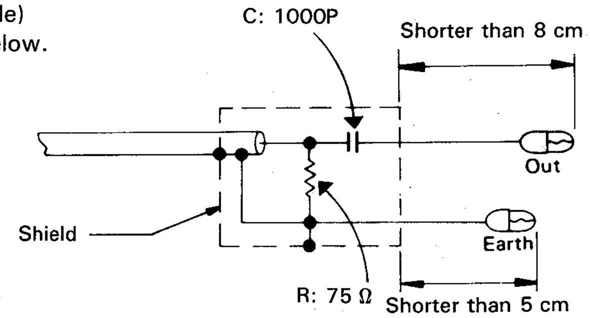

Fig. 2-6-1

Sweep Probe
</td></tr>
<tr><td>1</td><td>LLD coil</td><td>Video DET Out</td><td>T4</td><td>Sweep generator</td><td>1) Apply sweep signal to pin 5 of IC1.
2) Apply DC voltage to IC1 pin 2 so that 1 Vp-p is obtained from pin 18.
3) Adjust T4 for maximum 38.9 MHz marker.</td></tr>
<tr><td>2</td><td>AFC</td><td>Video DET Out</td><td>T3</td><td>Sweep generator</td><td>1) Apply sweep signal to pin 5 of IC1.
2) Apply DC voltage to IC1 pin 2 for maximum output from pin 13.
3) Adjust T3 to set the 38.9 MHz marker to 4.5 V.</td></tr>
</table>

No.	Item	Check Point	Adjustment Parts	Signal & Mode	Description
3	Sound trap	Base of Q1	T1	Sweep generator	1) Apply sweep signal to pin 2 of JP1. 2) Apply DC 12 V to IC3 pin 13. 3) Connect the oscilloscope to the base of Q1. 4) Adjust T1 for minimum 34.4 MHz marker.
4	Color level	Video out CN1-1	R57	Signal GEN	1) Receive a color bar signal. 2) As indicated in the figure, adjust R57 for 54% magenta level.
	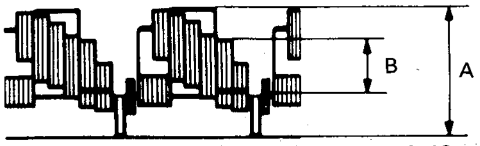 B: magenta A:B = 1:0.48 PAL signal **Fig. 2-6-2**				
5	AGC	JP1, 2 Pin	R11	Broadcast	1) Turn R11 for maximum level at the front end IF terminal. 2) Then adjust R11 for 7 dB less than the maximum value.

SECTION 3
CHARTS AND DIAGRAMS

3.1 CIRCUIT BOARD LOCATIONS

NO.	PWB NAME
70	JUMP DET
58	DRUM MOTOR
56	CASSETTE HOUSING
54	END SENS
53	REC SAFETY
52	RELAY
51	DECK TERMINAL
48	SERVO
45	COLOR
43	PRE/REC
42	CONNECT
41	UPPER DRUM
35	MEMORY
28	SWITCH/DISPLAY
22	OPERATION
20	TIMER
12	A/CTL HEAD
08	TUNER CONTROL
07	IF
06	TERMINAL
04	MECHACON
03	MAIN (VIDEO/SERVO/AUDIO/REG)
01	SW REG

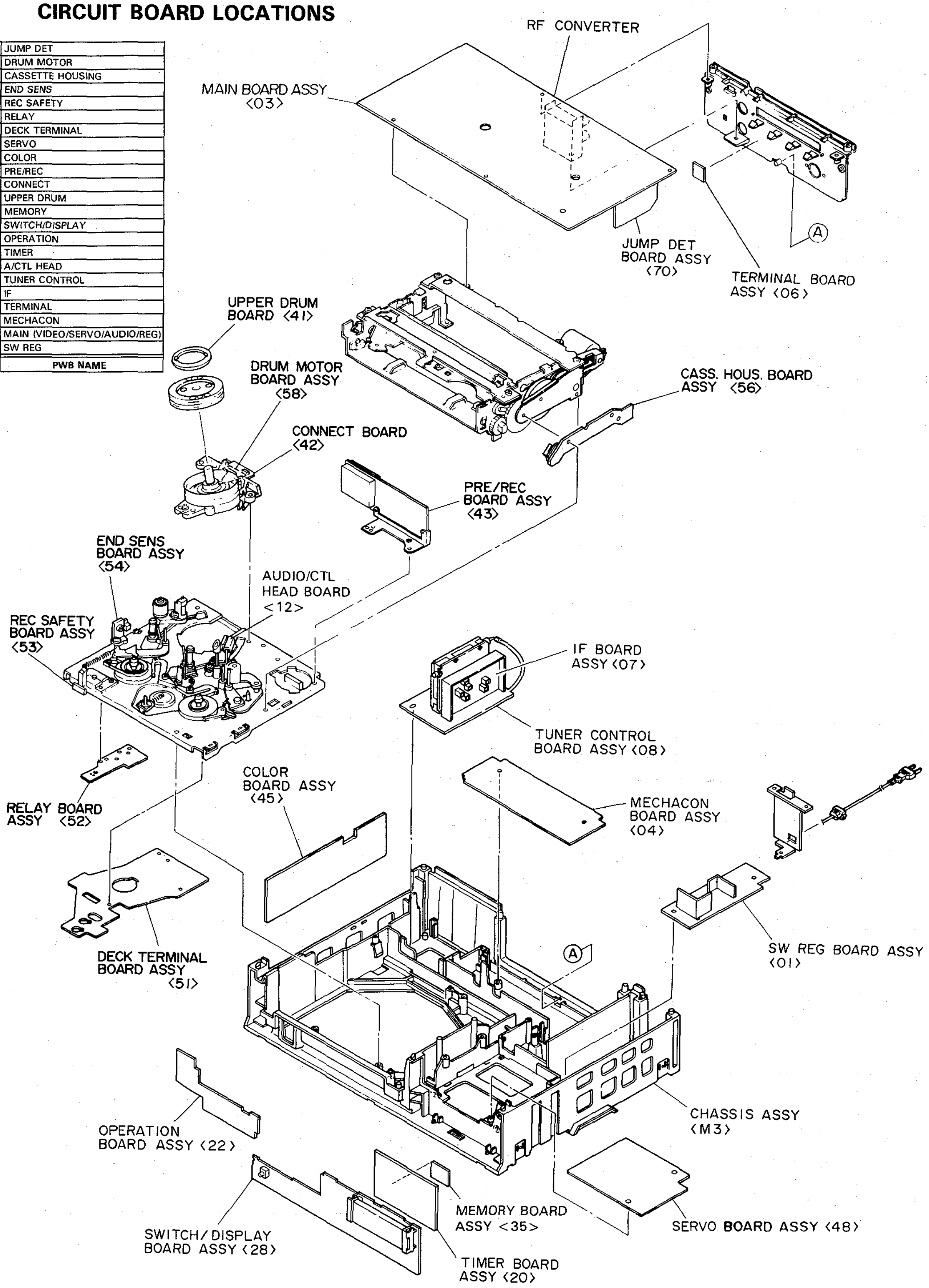

3.2 MAIN TYPES OF ACTIVE AND PACKAGE CIRCUITS

INTEGRATED CIRCUIT

NAME	L
BA6222	1A
BA6259N	1A
BU4069UB	2A
HA118019NT	3A
HD49722NT	3A
M50965-358SP	1B
NJM2233AS	2B
NJM2234S	2B
PB20166F	3B
STK5474	1C
STR-D1760-F	2C
UPD75212ACW-014	1B

TRANSISTOR

NAME	L
DTA114EU	3C
DTA114TS	1D
DTC144ES	1D
DTC144EU	3C
DTC144WU	3C
DTD114ES	1D
2SA1532(C)	3C
2SA1576(RS)	3C
2SC4081(RS)	3C

DIODE

NAME	L
DAN202U	2D
HVP21-01S4A	3D
RD4.7ES-T1B3	1E
SLH-56DC3F	2E
S1WB(A)60	3E

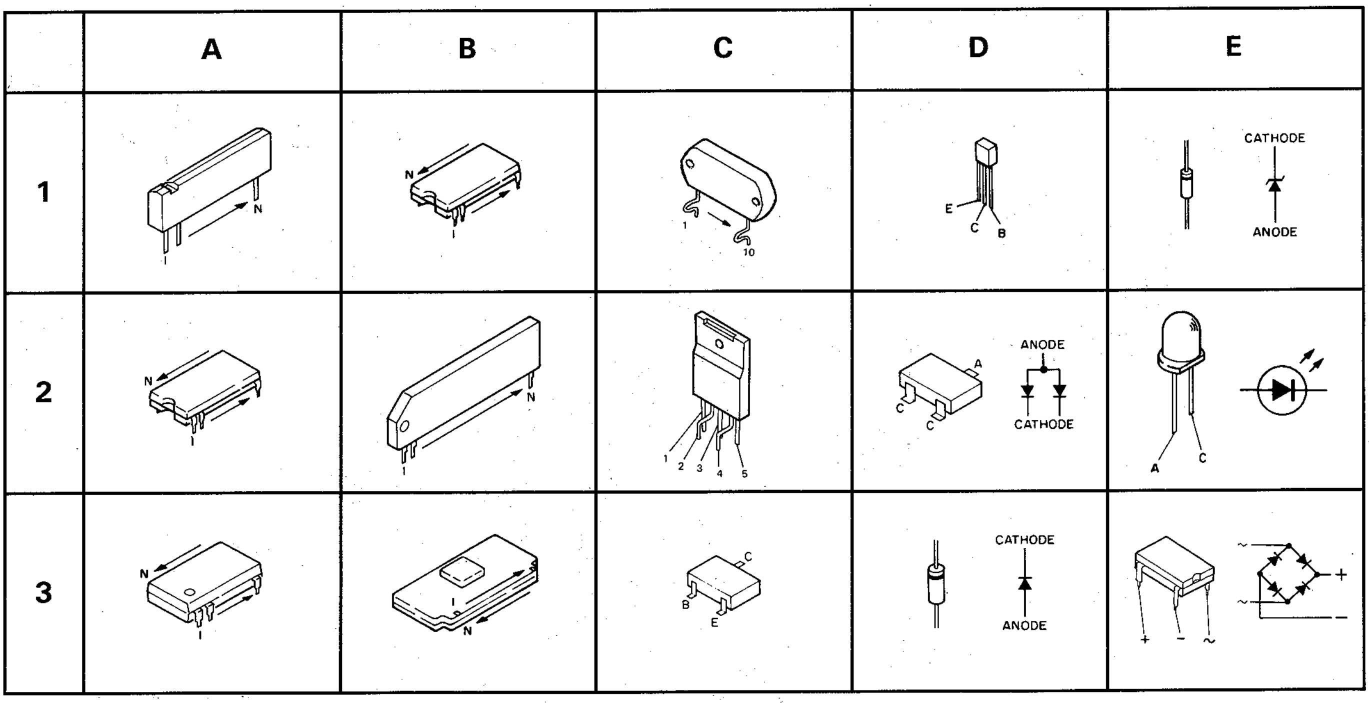

3.3 BOARD INTERCONNECTION DIAGRAM

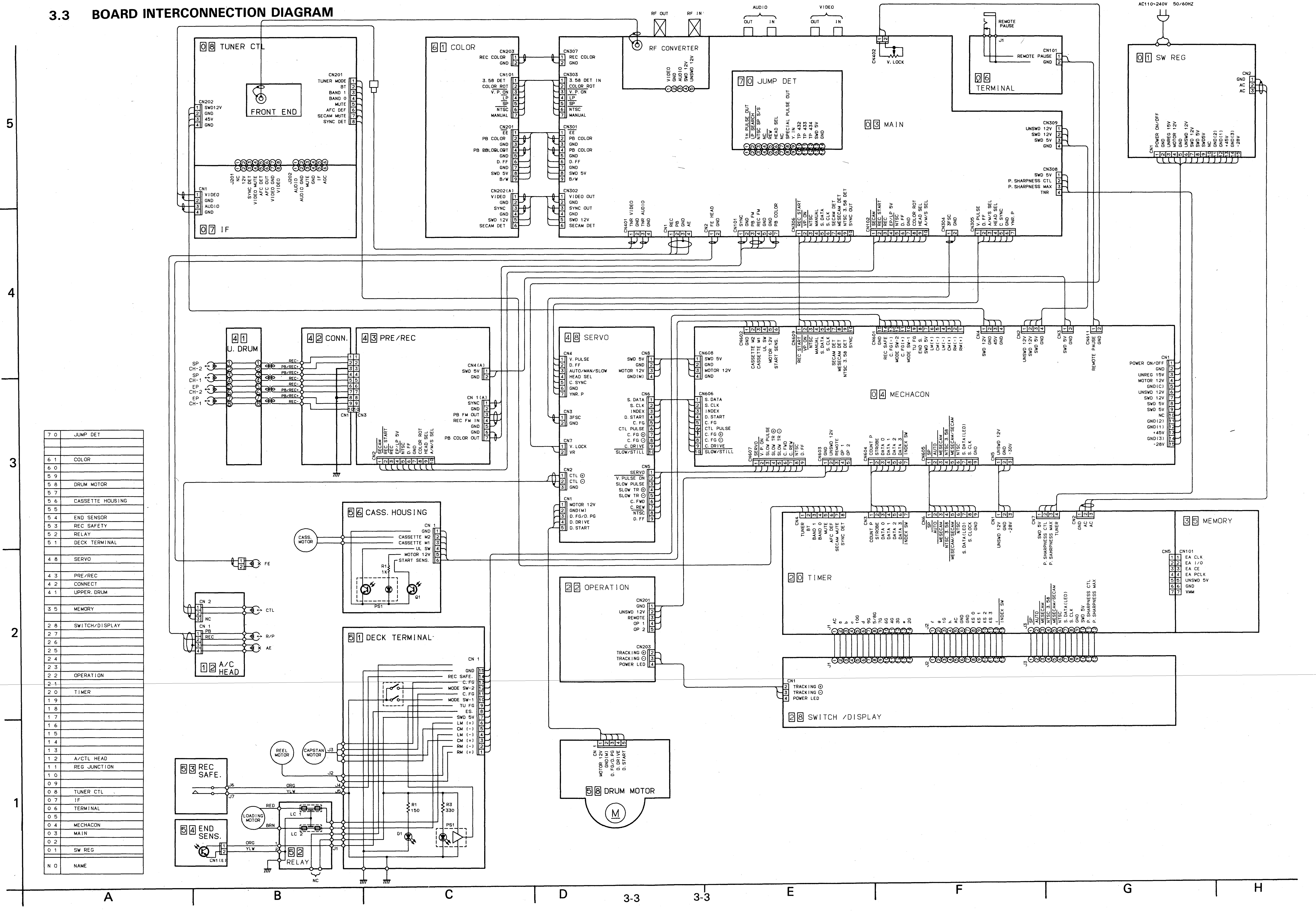

N O	NAME
7 0	JUMP DET
6 1	COLOR
6 0	
5 9	
5 8	DRUM MOTOR
5 7	
5 6	CASSETTE HOUSING
5 5	
5 4	END SENSOR
5 3	REC SAFETY
5 2	RELAY
5 1	DECK TERMINAL
4 8	SERVO
4 3	PRE/REC
4 2	CONNECT
4 1	UPPER DRUM
3 5	MEMORY
2 8	SWITCH/DISPLAY
2 7	
2 6	
2 5	
2 4	
2 3	
2 2	OPERATION
2 1	
2 0	TIMER
1 9	
1 8	
1 7	
1 6	
1 5	
1 4	
1 3	
1 2	A/CTL HEAD
1 1	REG JUNCTION
1 0	
0 9	
0 8	TUNER CTL
0 7	IF
0 6	TERMINAL
0 5	
0 4	MECHACON
0 3	MAIN
0 2	
0 1	SW REG
N O	NAME

3.4 VIDEO (LUMINANCE) BLOCK DIAGRAMS

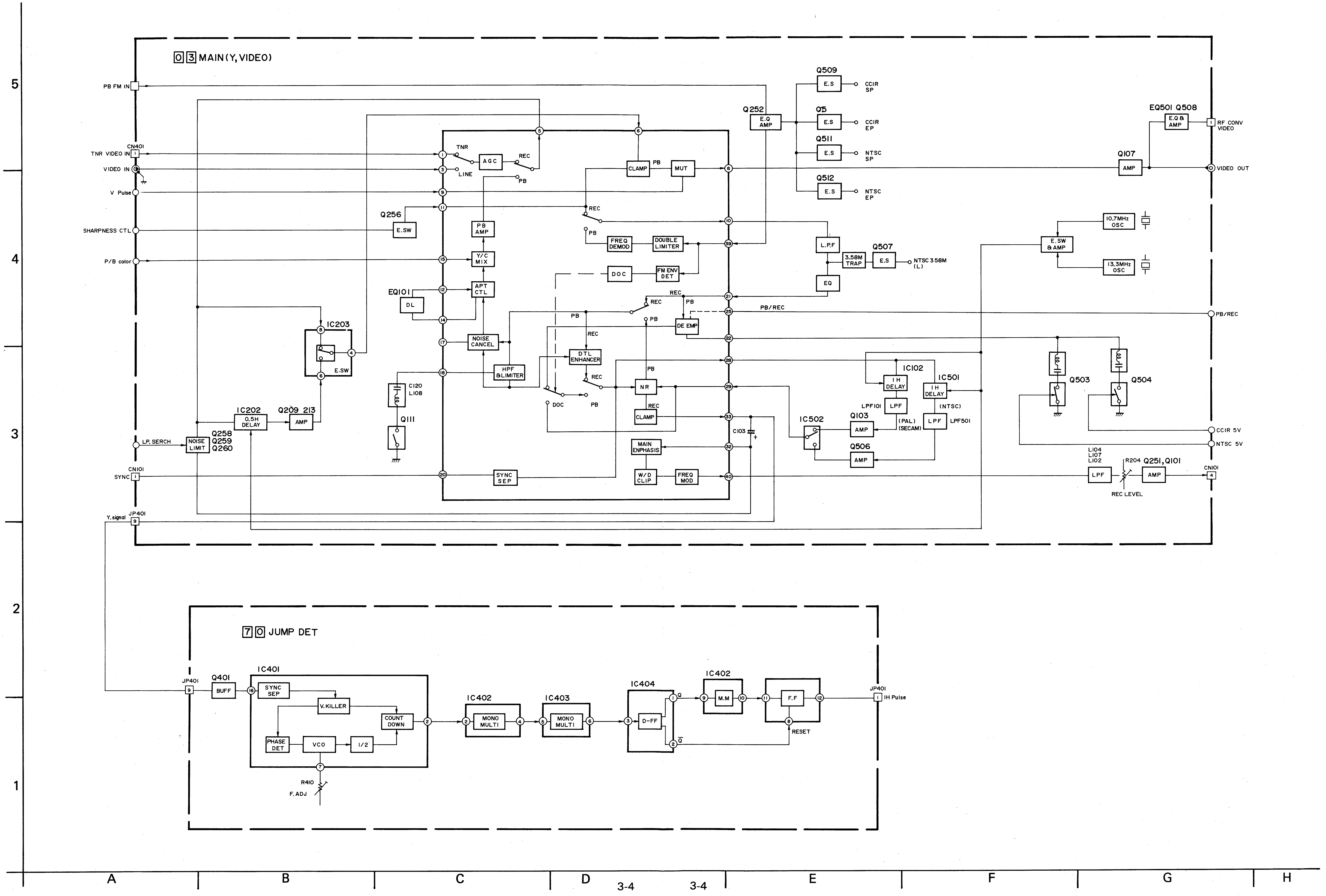

3.5 VIDEO (COLOR) BLOCK DIAGRAMS

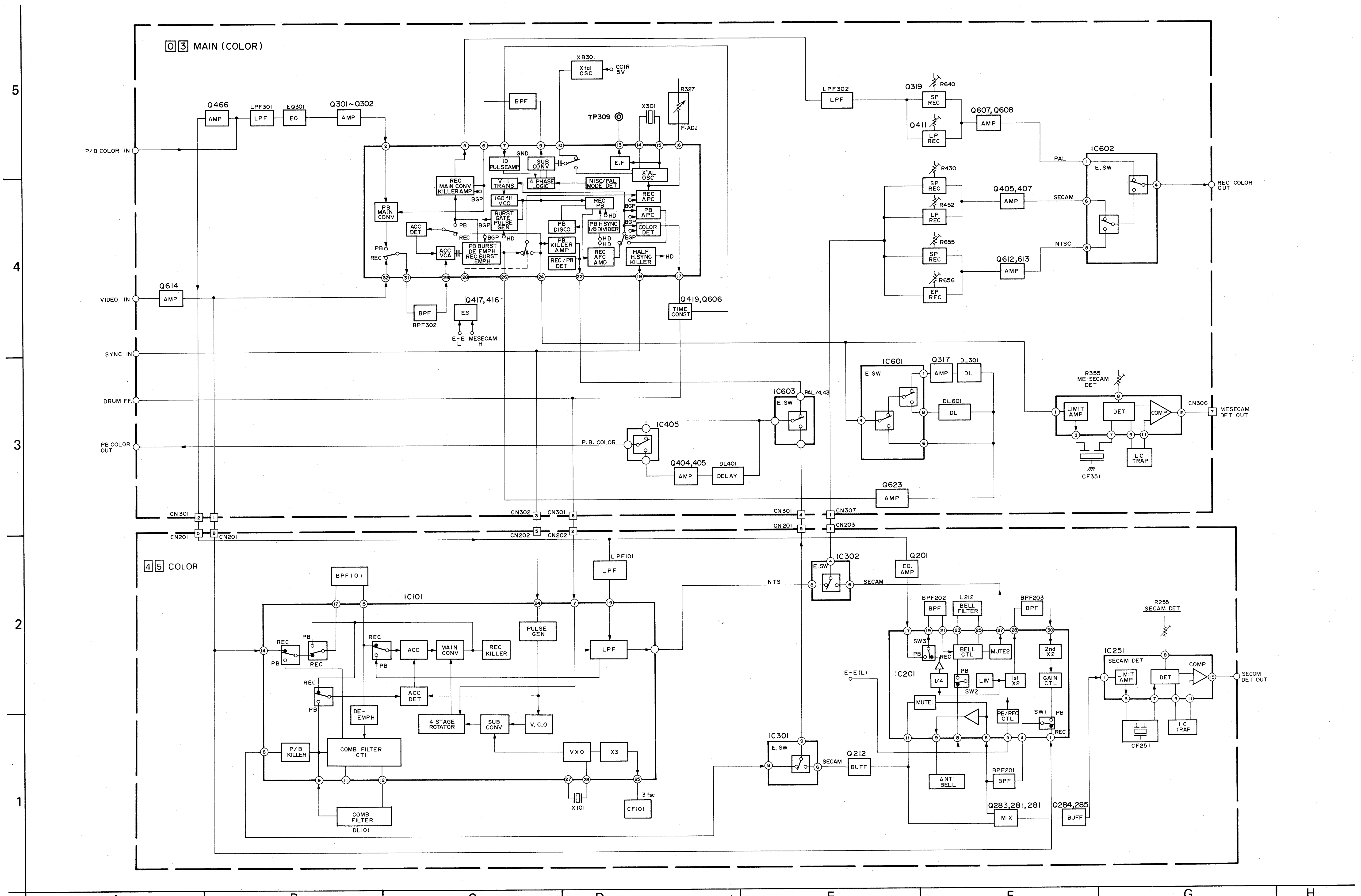

3.6 SWITCHING REGULATOR SCHEMATIC DIAGRAMS

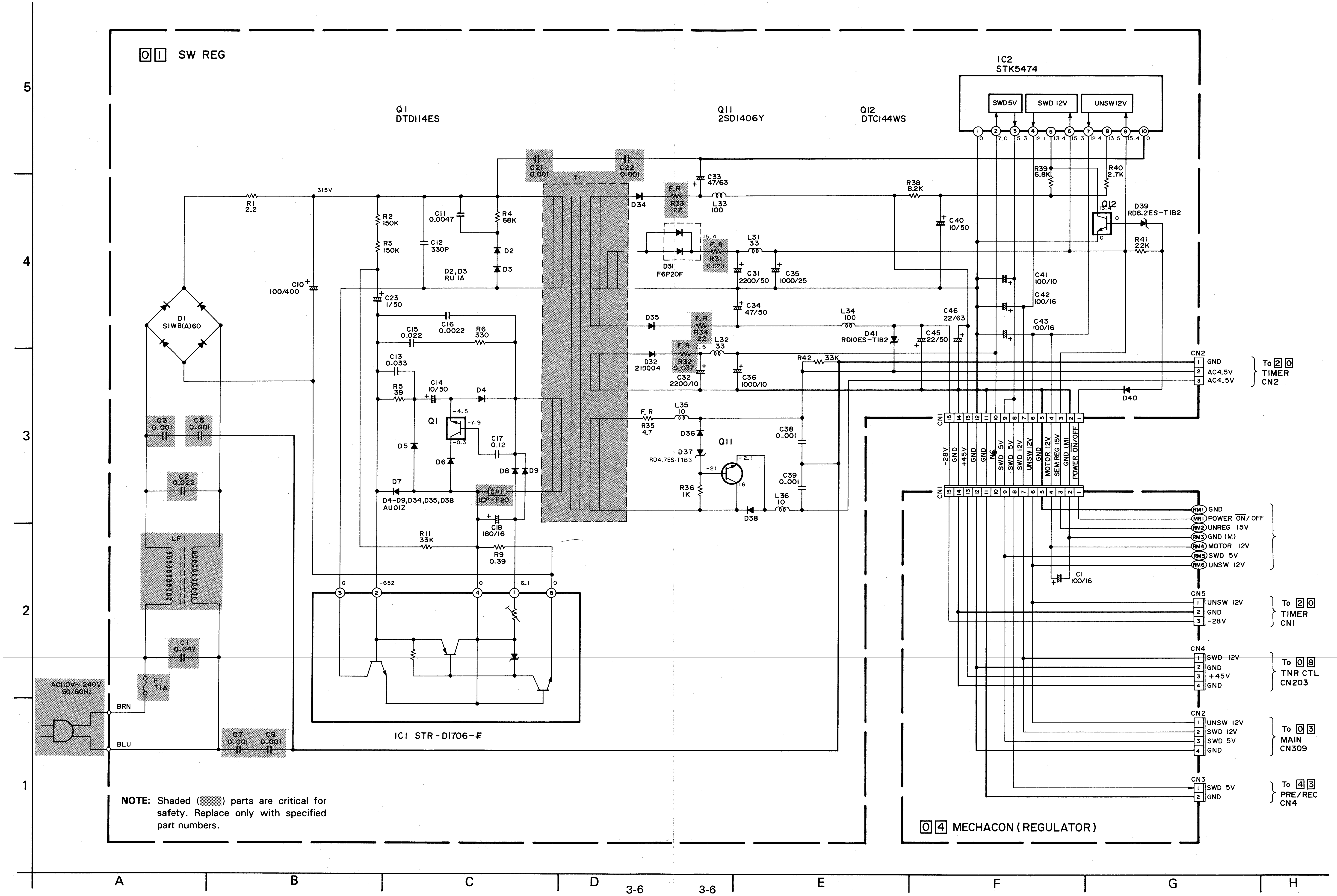

NOTE: Shaded (▒) parts are critical for safety. Replace only with specified part numbers.

3.7 SWITCHING REGULATOR CIRCUIT BOARD

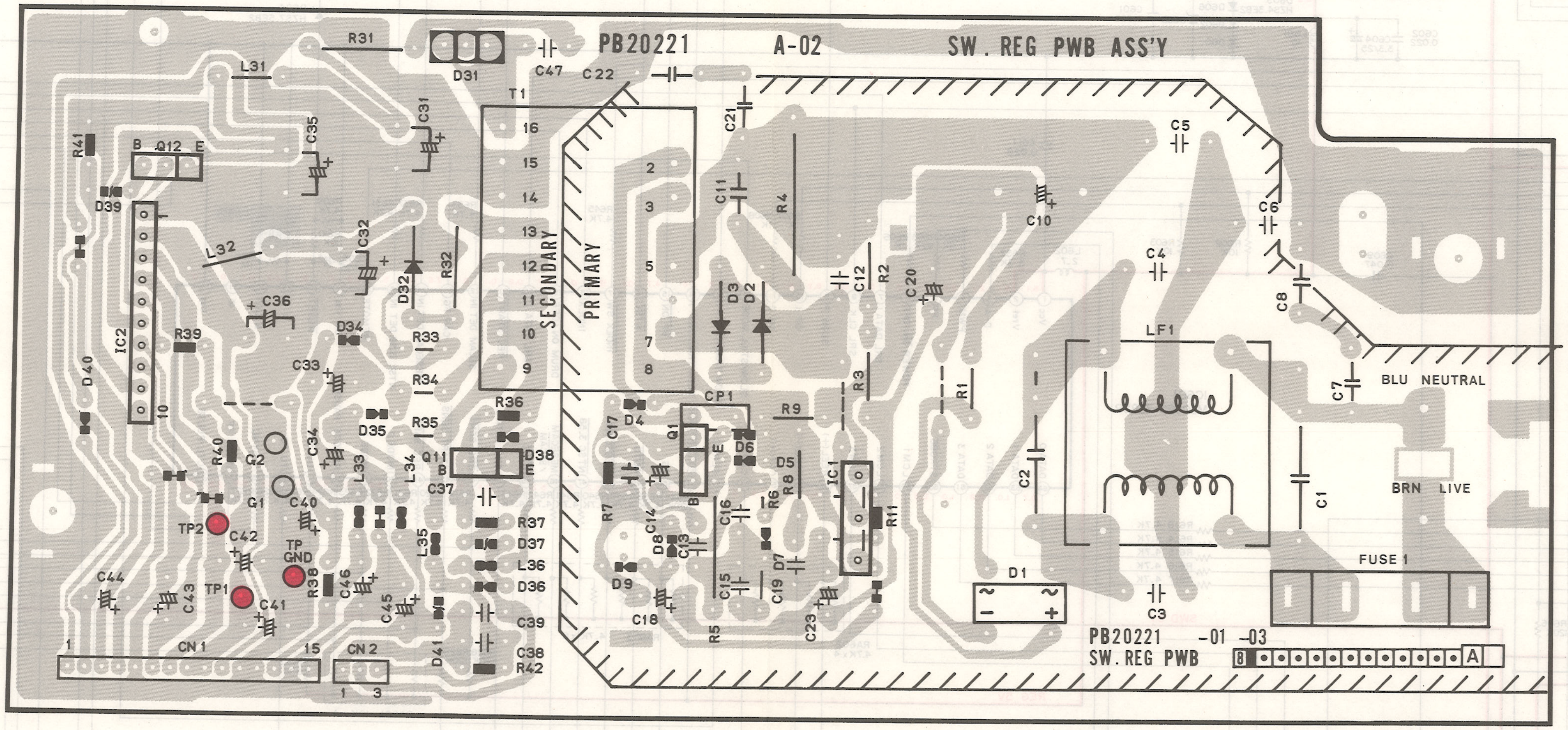

A B C D 3-7 3-7 E F G H

3.8 MECHACON SCHEMATIC DIAGRAM

NOTE: Shaded (▒▒) parts are critical for safety. Replace only with specified part numbers.

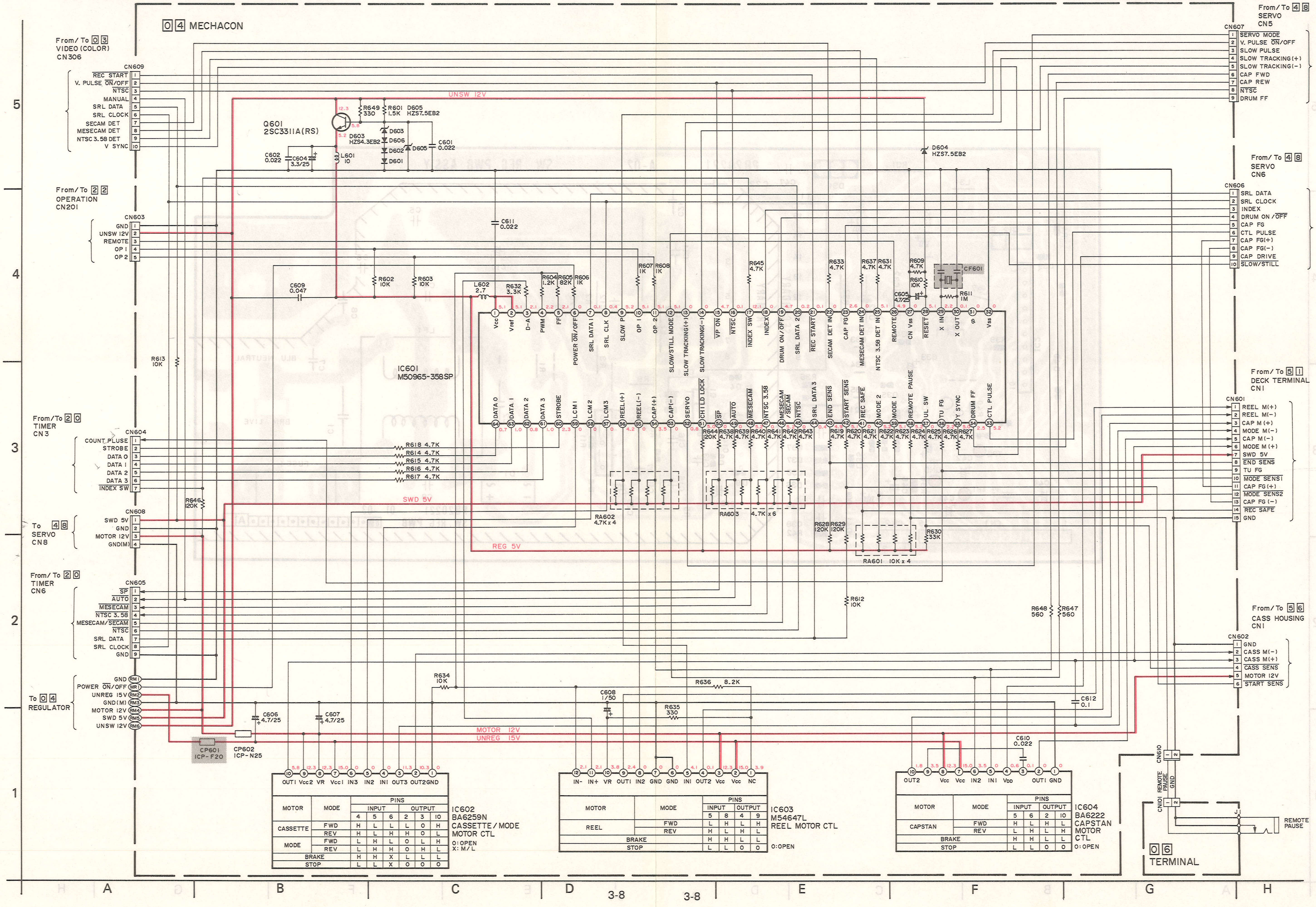

IC602 BA6259N CASSETTE/MODE MOTOR CTL

MOTOR	MODE	PINS INPUT 4	5	6	PINS OUTPUT 2	3	10
CASSETTE	FWD	H	L	L	L	O	H
	REV	H	L	H	H	O	L
MODE	FWD	L	H	L	O	L	H
	REV	L	H	H	O	H	L
BRAKE		H	H	X	L	L	L
STOP		L	L	X	O	O	O

O: OPEN
X: M/L

IC603 M54647L REEL MOTOR CTL

MOTOR	MODE	PINS INPUT 5	8	PINS OUTPUT 4	9
REEL	FWD	L	H	L	H
	REV	H	L	H	L
BRAKE		H	H	L	L
STOP		L	L	O	O

O:OPEN

IC604 BA6222 CAPSTAN MOTOR CTL

MOTOR	MODE	PINS INPUT 5	6	PINS OUTPUT 2	10
CAPSTAN	FWD	H	L	H	L
	REV	L	H	L	H
BRAKE		H	H	L	L
STOP		L	L	O	O

O:OPEN

3.9 DECK TERMINAL SCHEMATIC DIAGRAMS

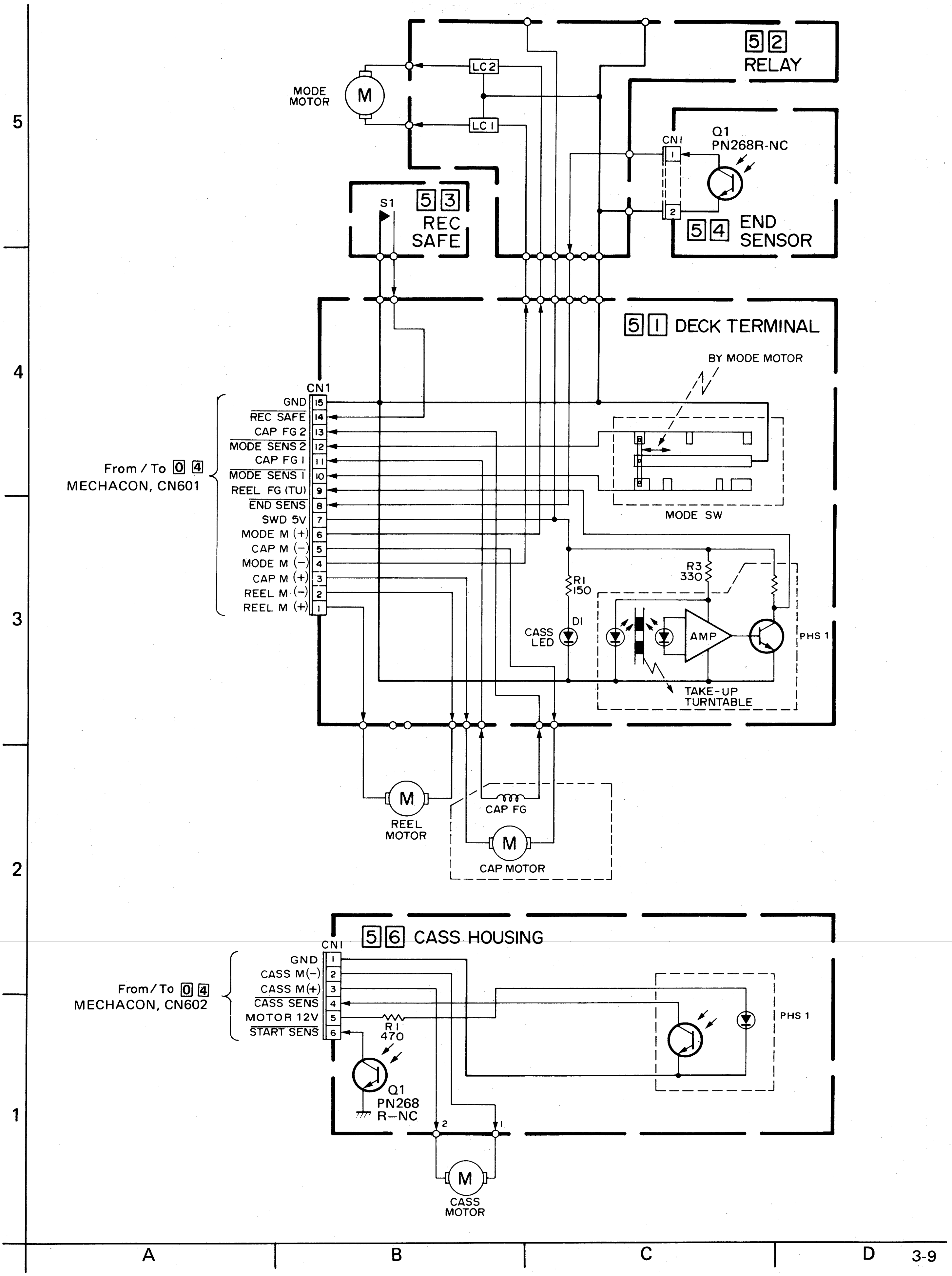

3.10 DECK TERMINAL CIRCUIT BOARDS

—DECK TERMINAL—

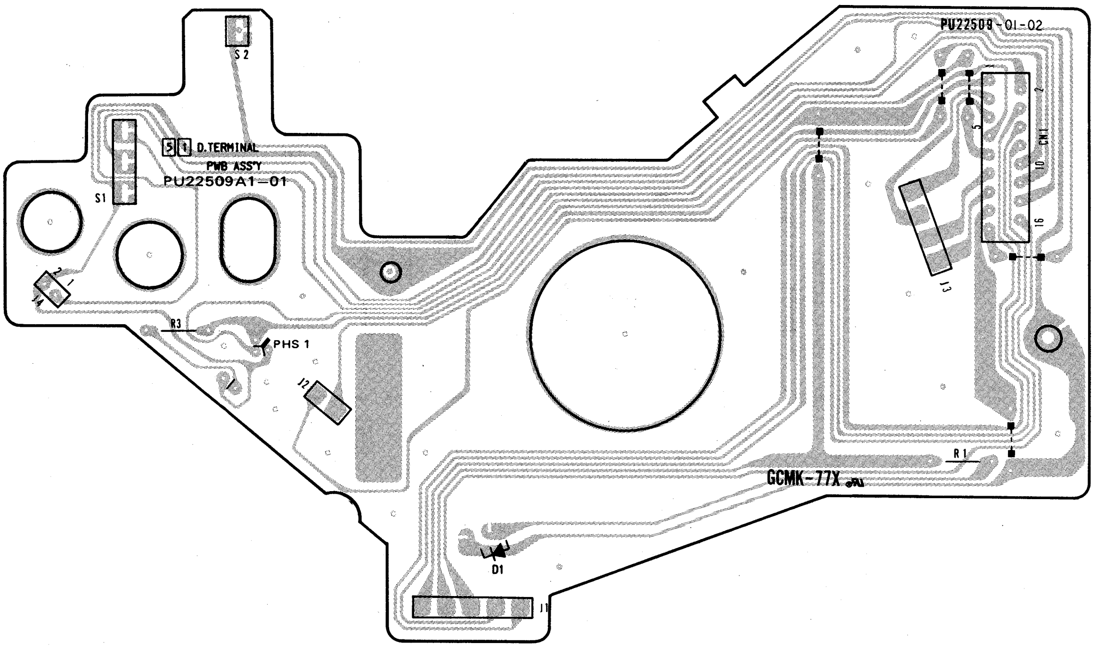

—CASSETTE HOUSING—

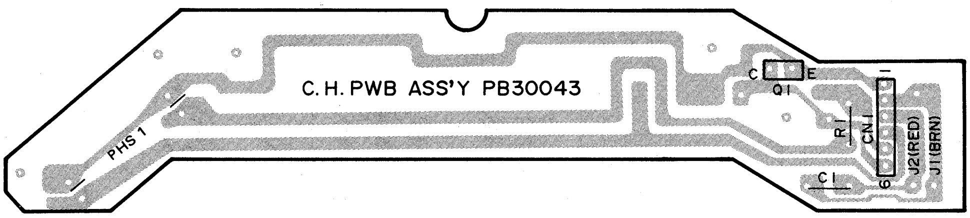

—REC SAFETY—

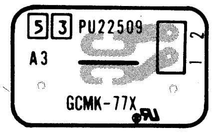

—END SENSOR—

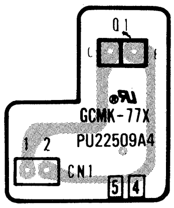

—RELAY—

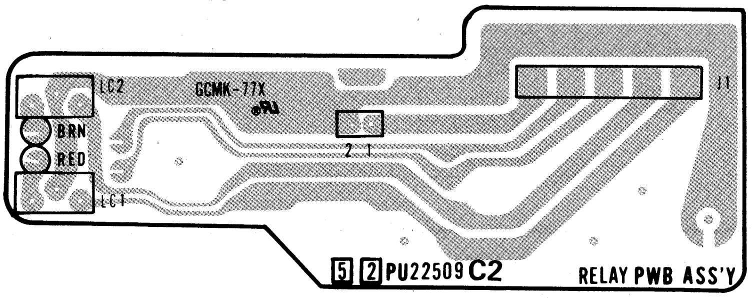

—AUDIO/CTL HEAD—

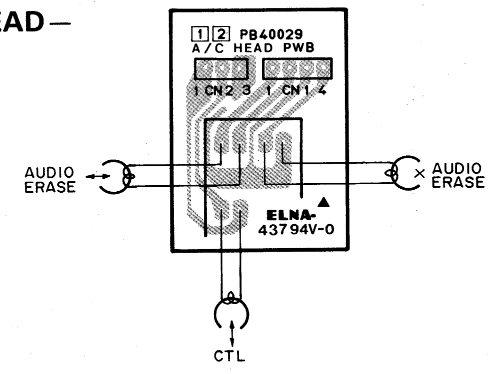

5 4 3 2 1

A B C D

—MECHACON—

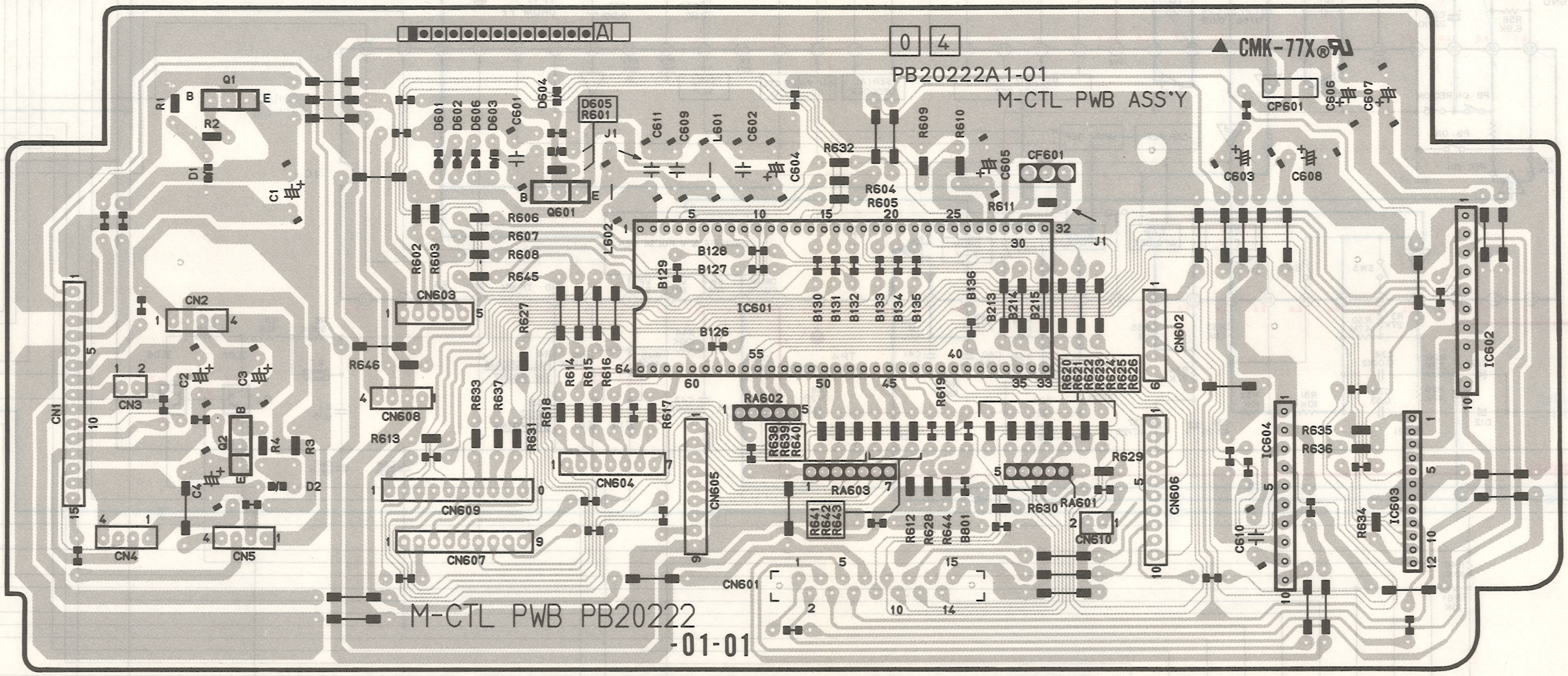

—TERMINAL—

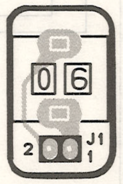

PB20222A2

3.12 SERVO SCHEMATIC DIAGRAM

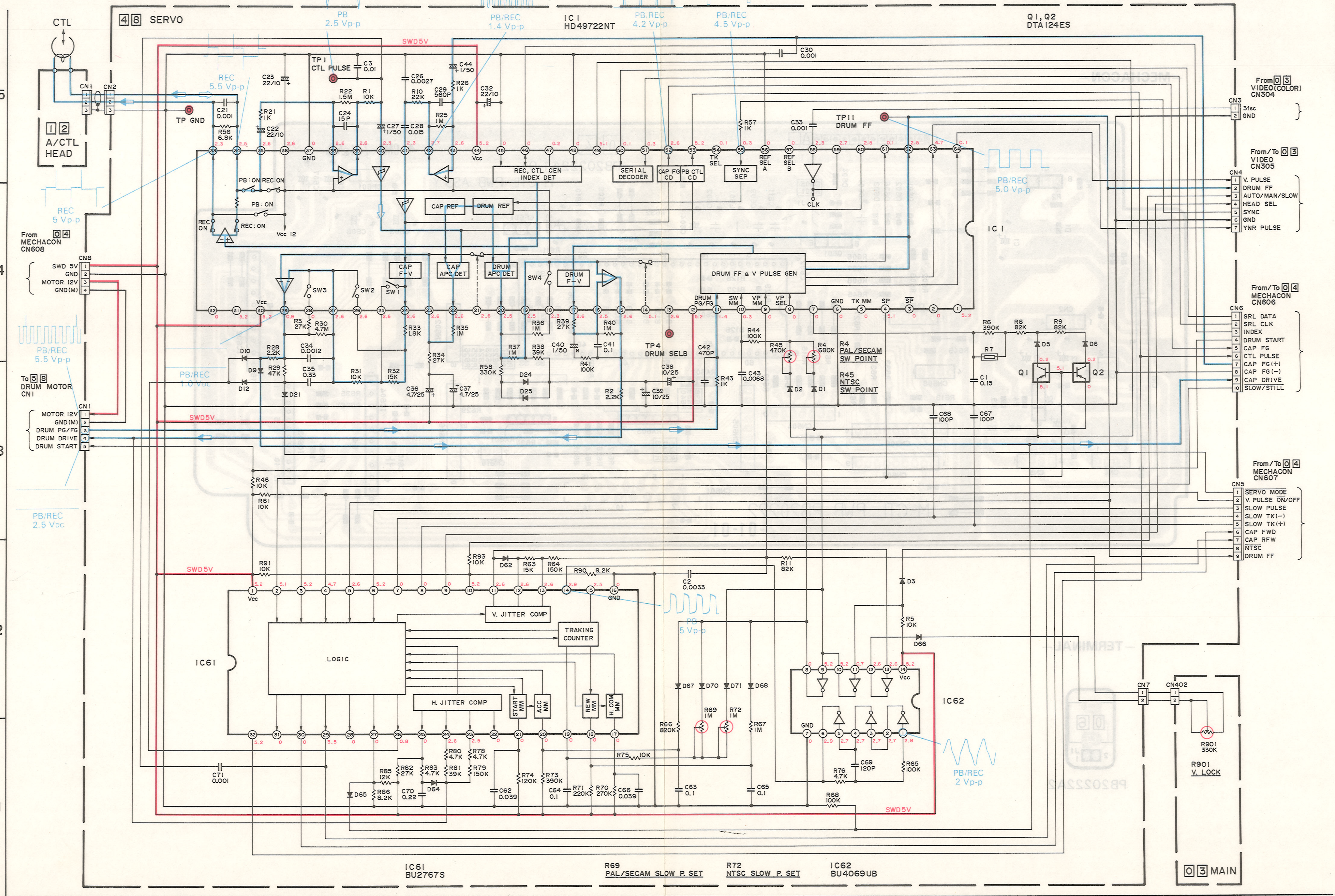

3.13 SERVO CIRCUIT BOARD

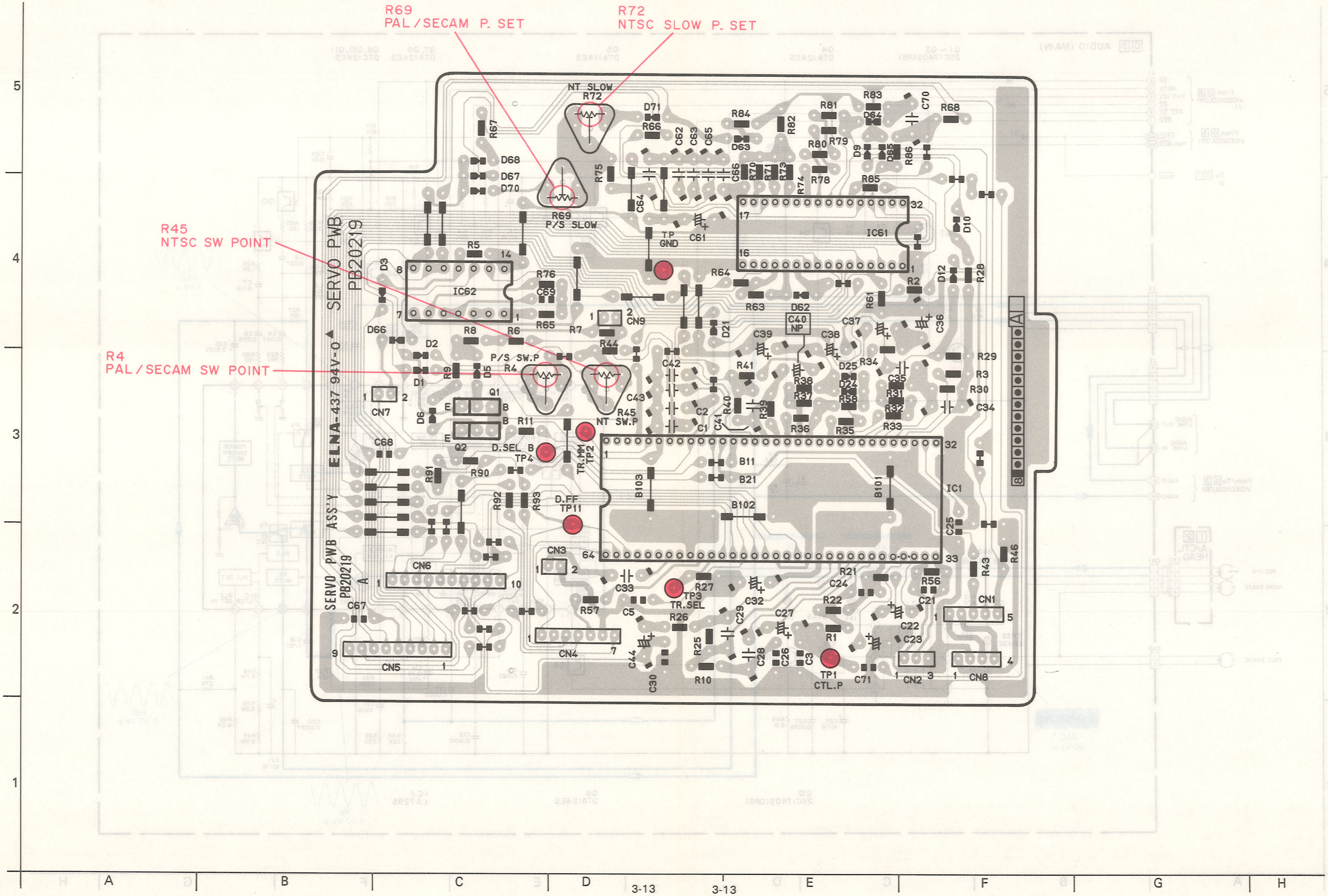

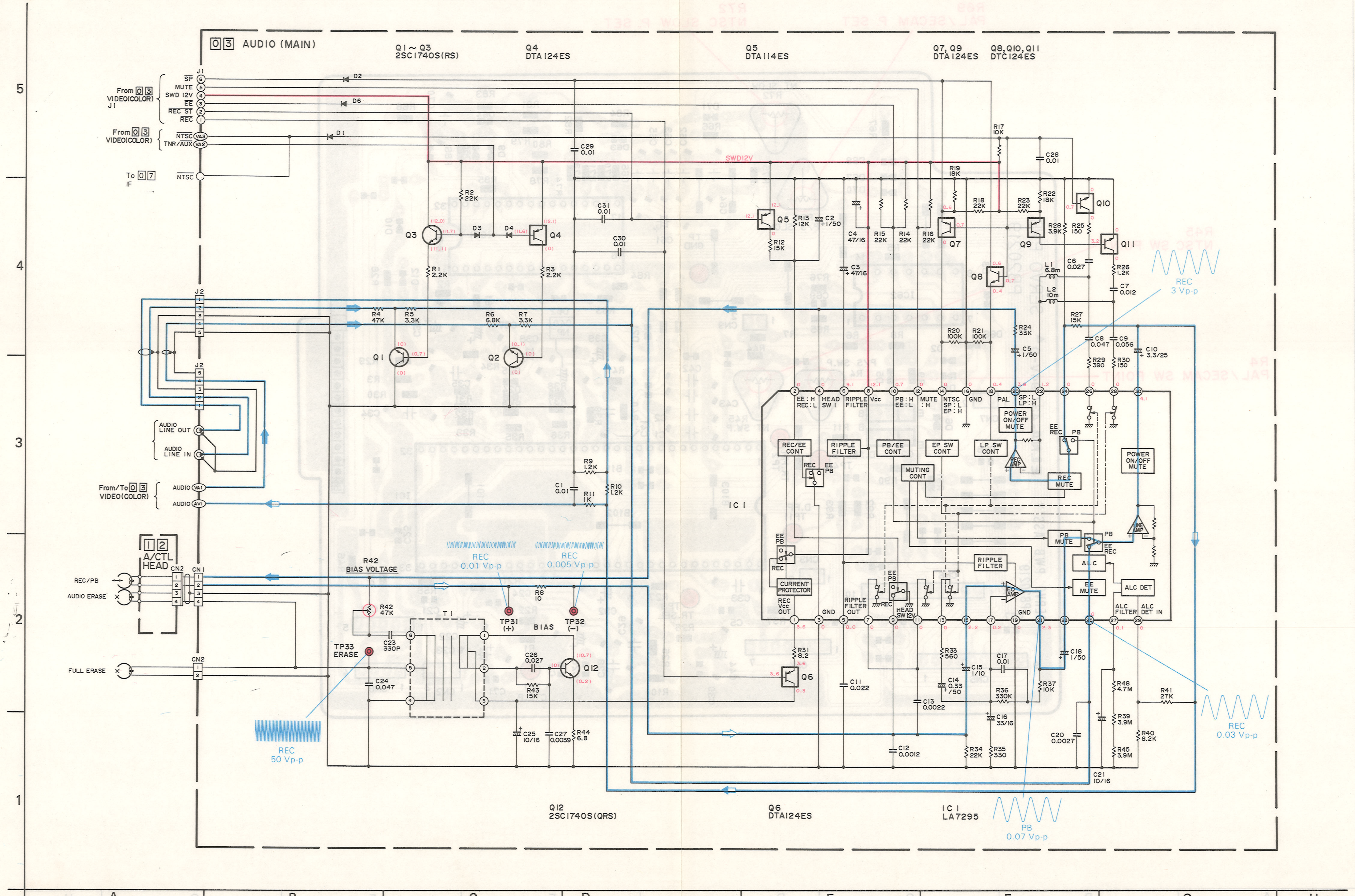
03 AUDIO (MAIN)
Q1 ~ Q3 2SC1740S(RS)
Q4 DTA124ES
Q5 DTA114ES
Q7, Q9 DTA124ES
Q8, Q10, Q11 DTC124ES
From 03 VIDEO(COLOR) J1
SP
MUTE
SWD 12V
EE
REC ST
REC
From 03 VIDEO(COLOR)
NTSC
TNR/AUX
To 07 IF
AUDIO LINE OUT
AUDIO LINE IN
From/To 03 VIDEO(COLOR)
12 A/CTL HEAD
REC/PB
AUDIO ERASE
FULL ERASE
R42 BIAS VOLTAGE
TP33 ERASE
TP31 (+)
TP32 (−)
BIAS
SWD12V
IC1
REC 0.01 Vp-p
REC 0.005 Vp-p
REC 50 Vp-p
REC 3 Vp-p
REC 0.03 Vp-p
PB 0.07 Vp-p
REC/EE CONT
RIPPLE FILTER
PB/EE CONT
EP SW CONT
LP SW CONT
MUTING CONT
POWER ON/OFF MUTE
REC MUTE
PB MUTE
ALC
ALC DET
EE MUTE
CURRENT PROTECTOR
LINE AMP
EQ AMP
REC AMP
Q12 2SC1740S(QRS)
Q6 DTA124ES
IC1 LA7295

3.15 VIDEO —Luminance Section— (MAIN) SCHEMATIC DIAGRAM

NOTE: Shaded (▒▒) parts are critical for safety. Replace only with specified part numbers.

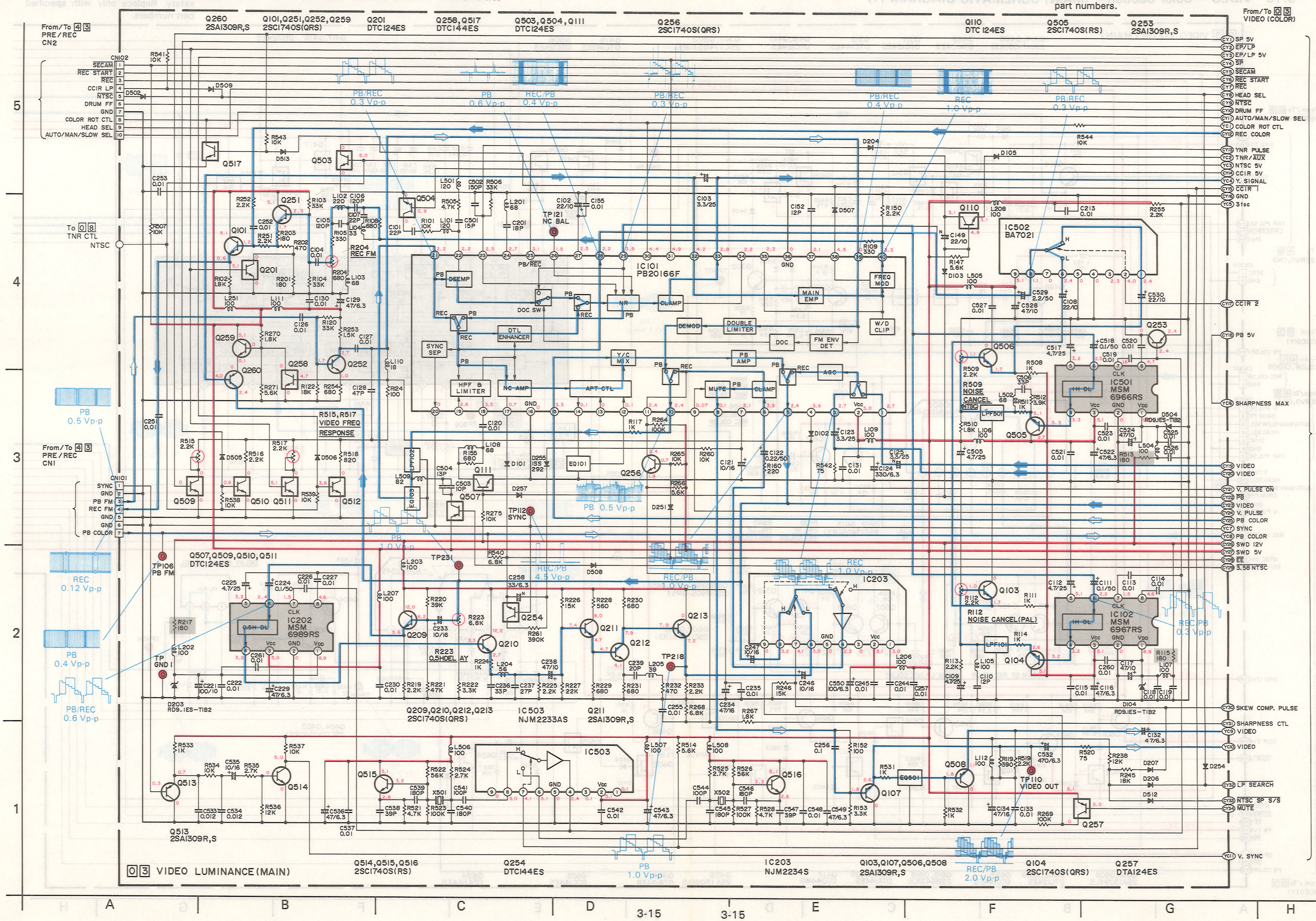

3.16 VIDEO —Color Section— (MAIN) SCHEMATIC DIAGRAM (1)

NOTE: Shaded (▒) parts are critical for safety. Replace only with specified part numbers.

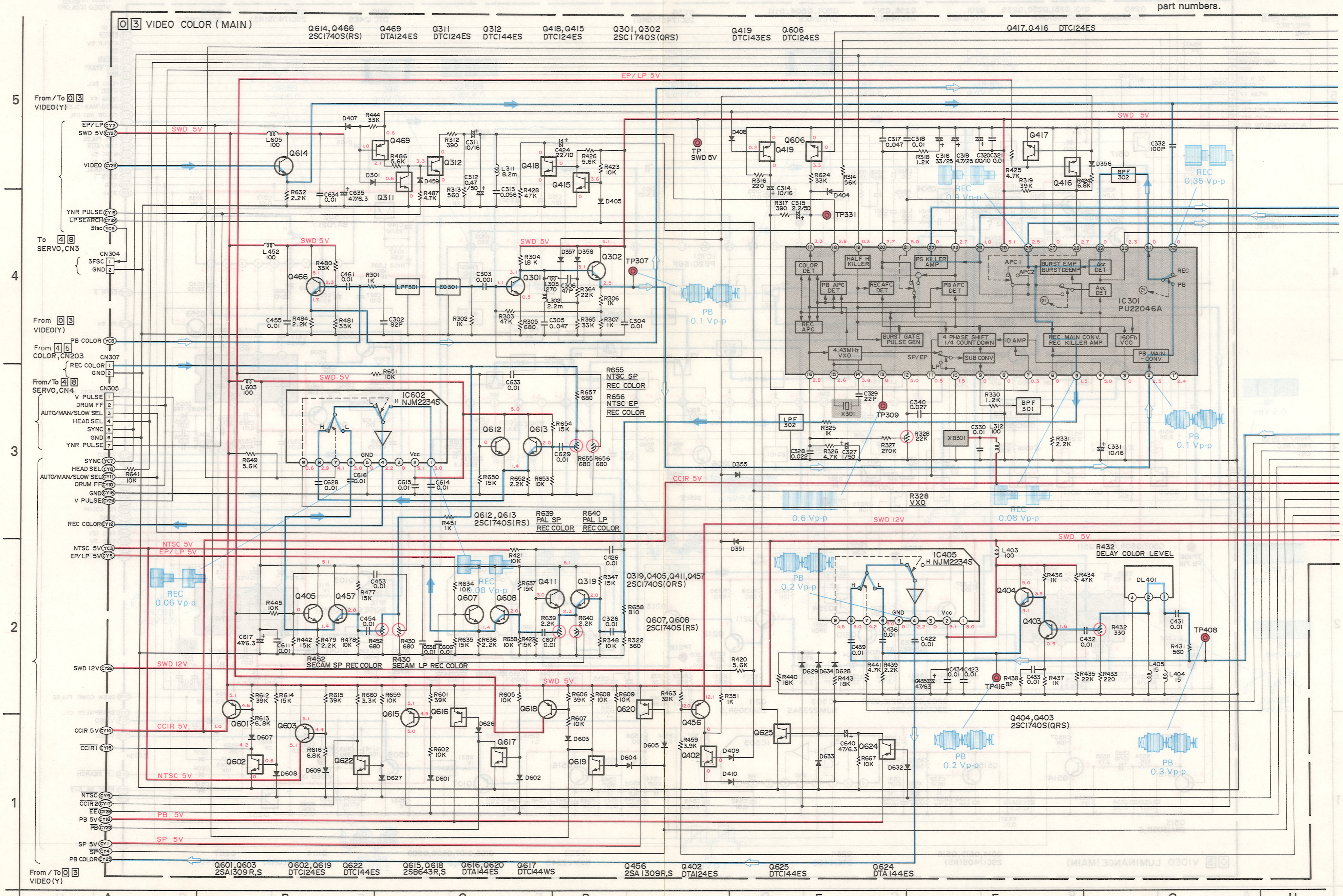

3.17 VIDEO —Color Section— (MAIN) SCHEMATIC DIAGRAM (2)

NOTE: Shaded ( ) parts are critical for safety. Replace only with specified part numbers.

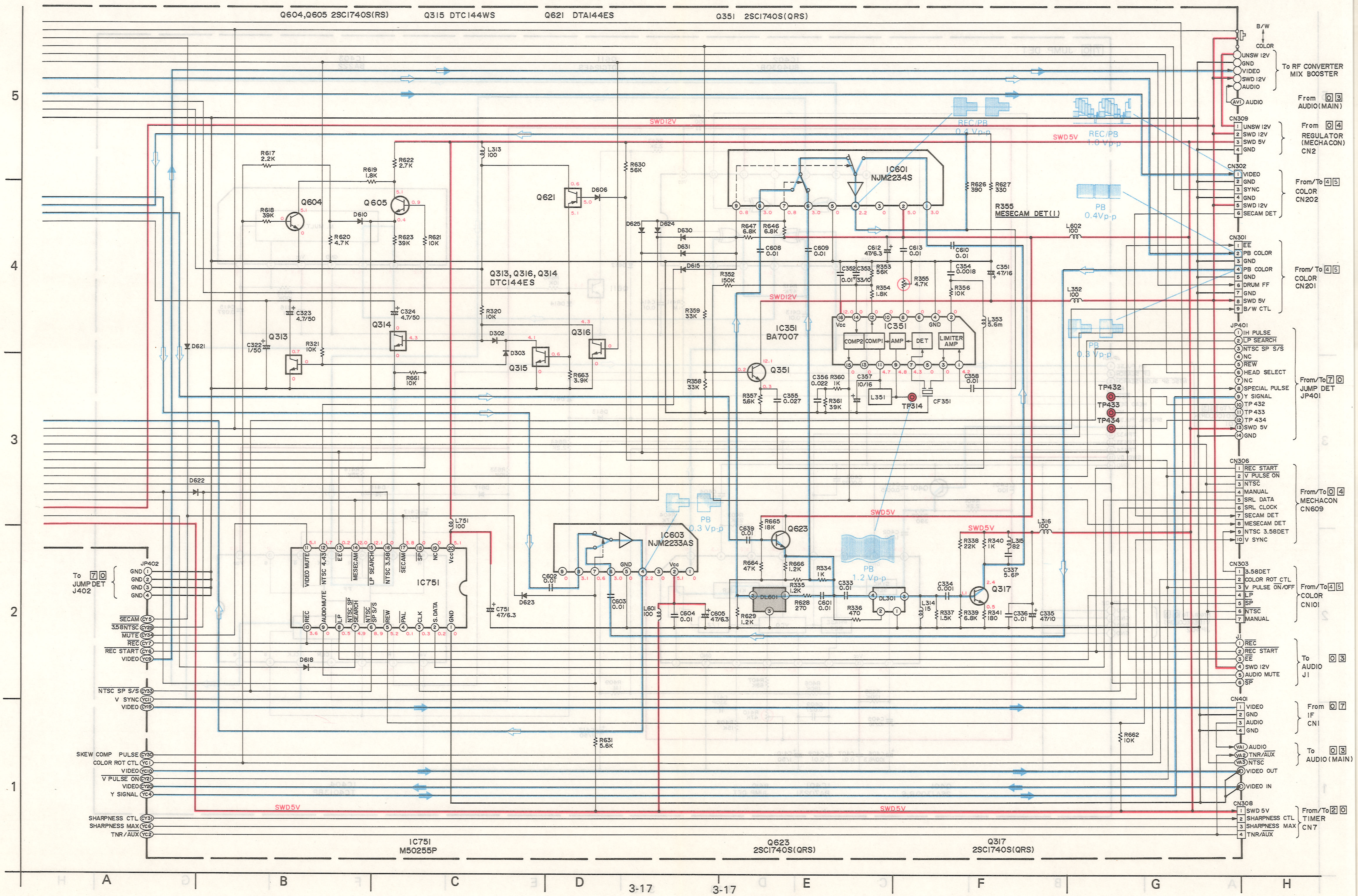

3.18 JUMP DET SCHEMATIC DIAGRAM

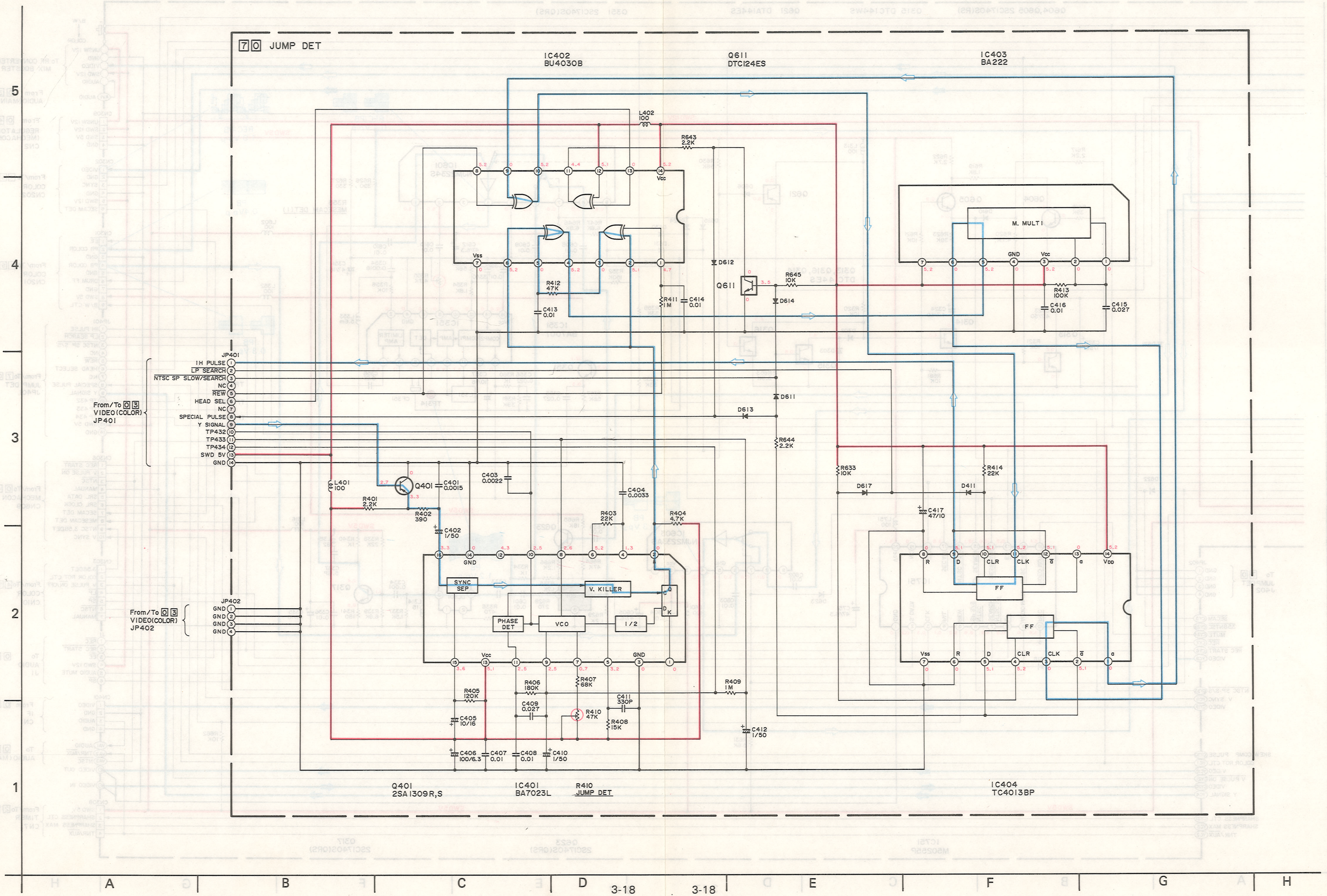

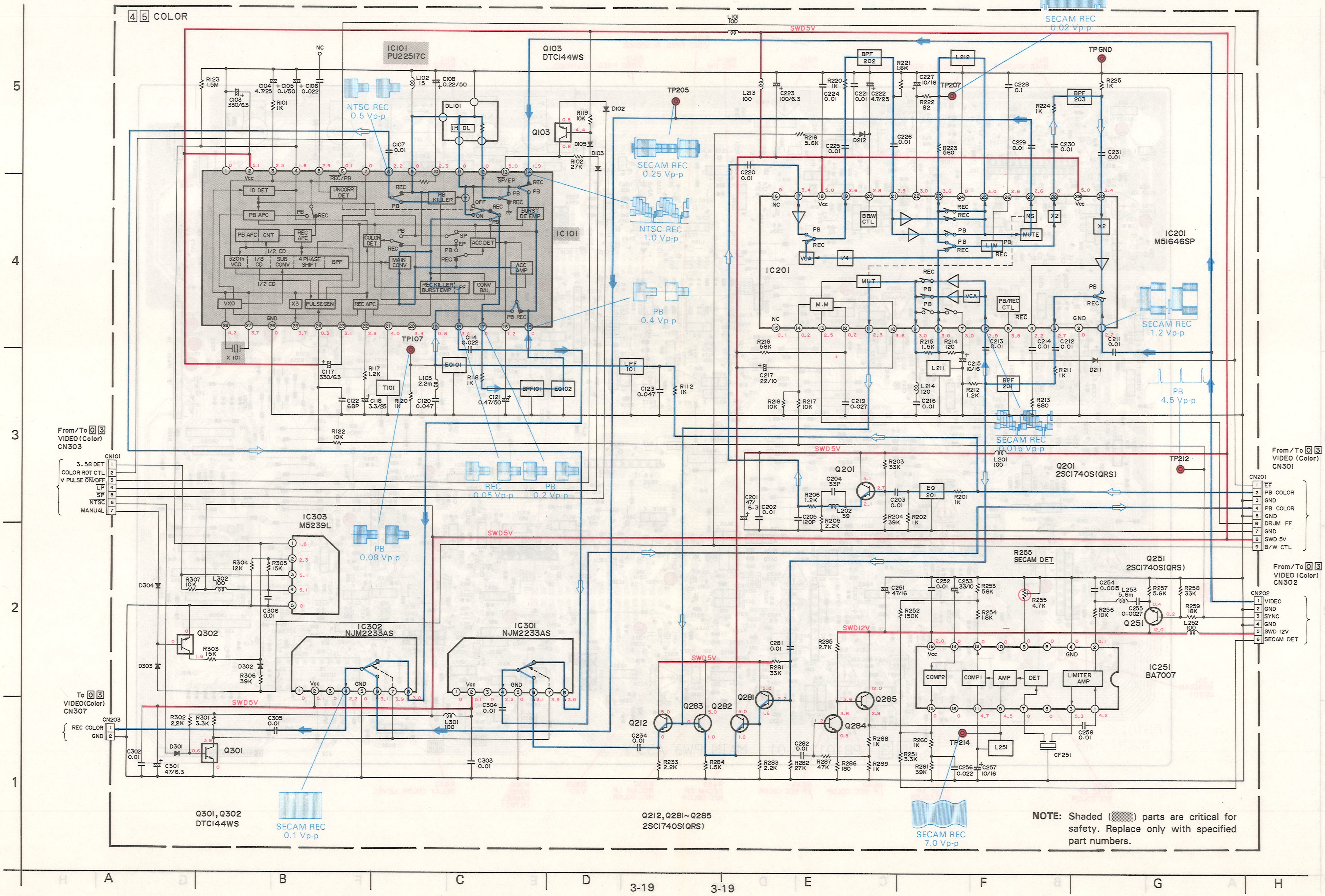

NOTE: Shaded (▒▒) parts are critical for safety. Replace only with specified part numbers.

3.20 MAIN CIRCUIT BOARD

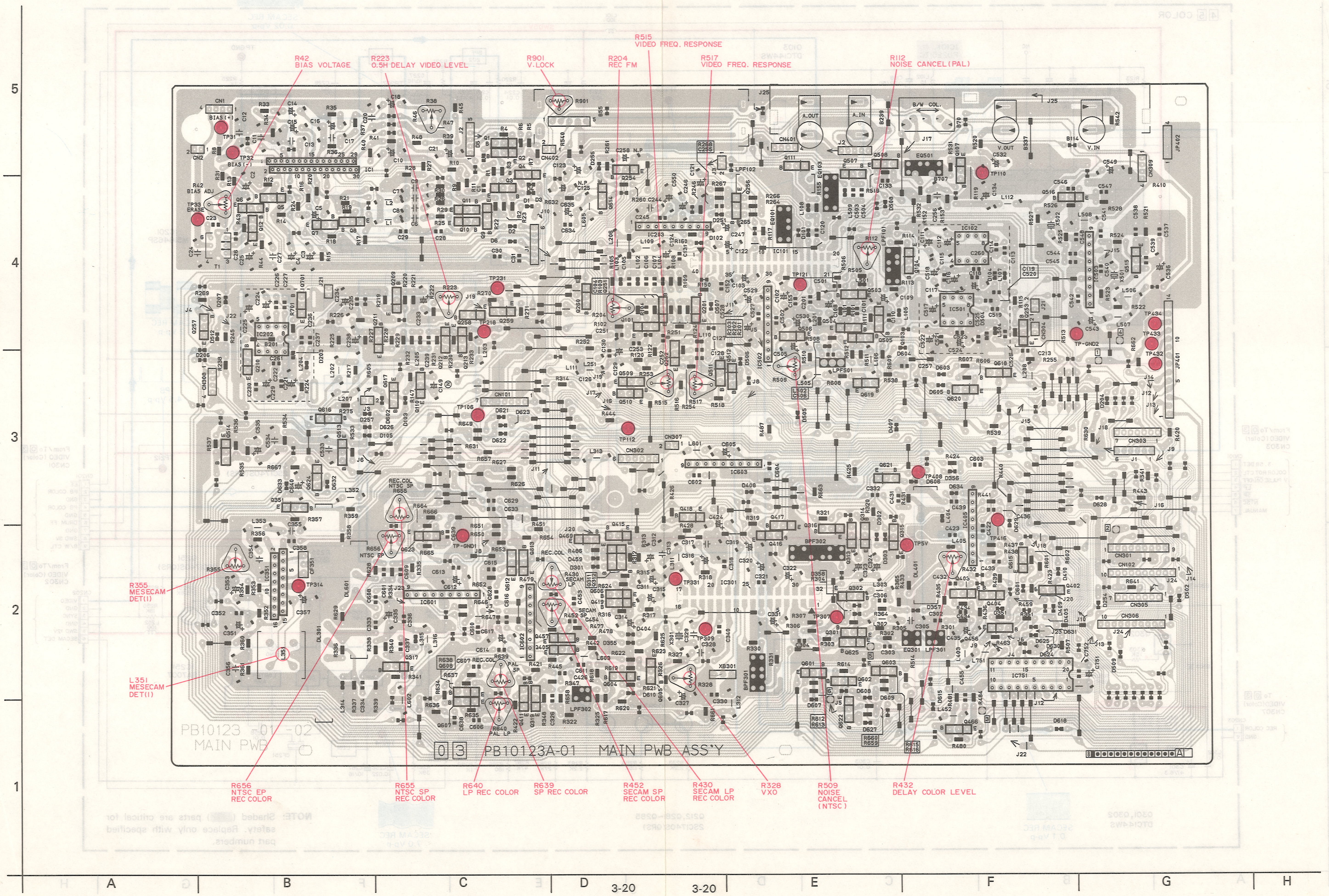

3.21 COLOR CIRCUIT BOARD/JUMP DET CIRCUIT BOARD

—COLOR—

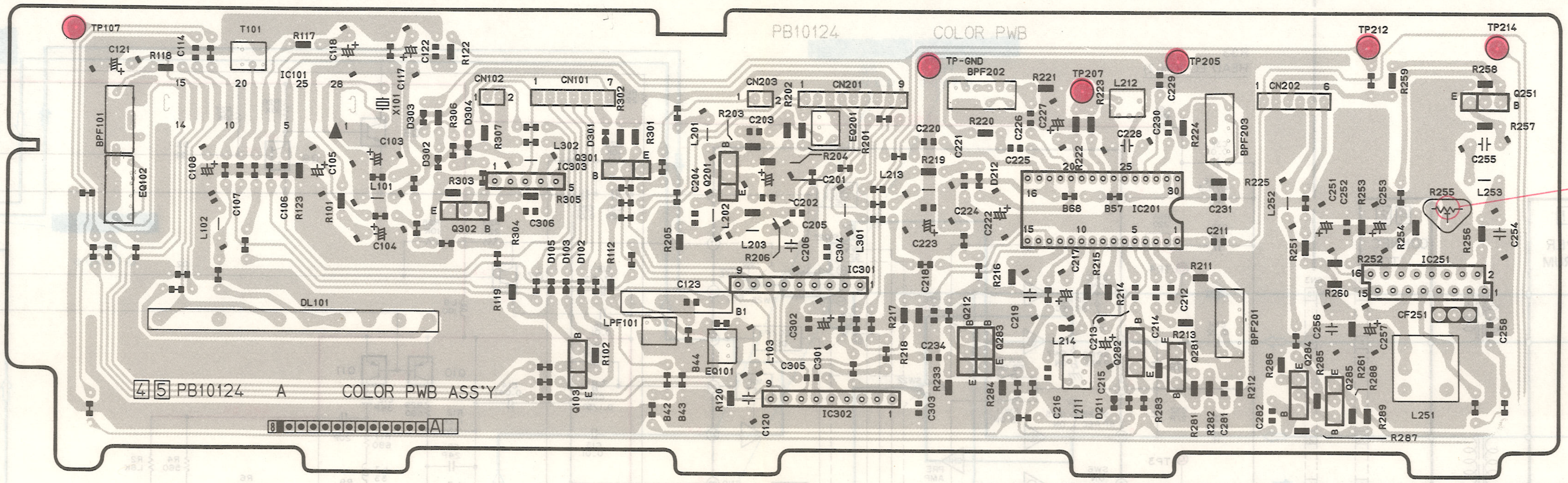

—JUMP DET—

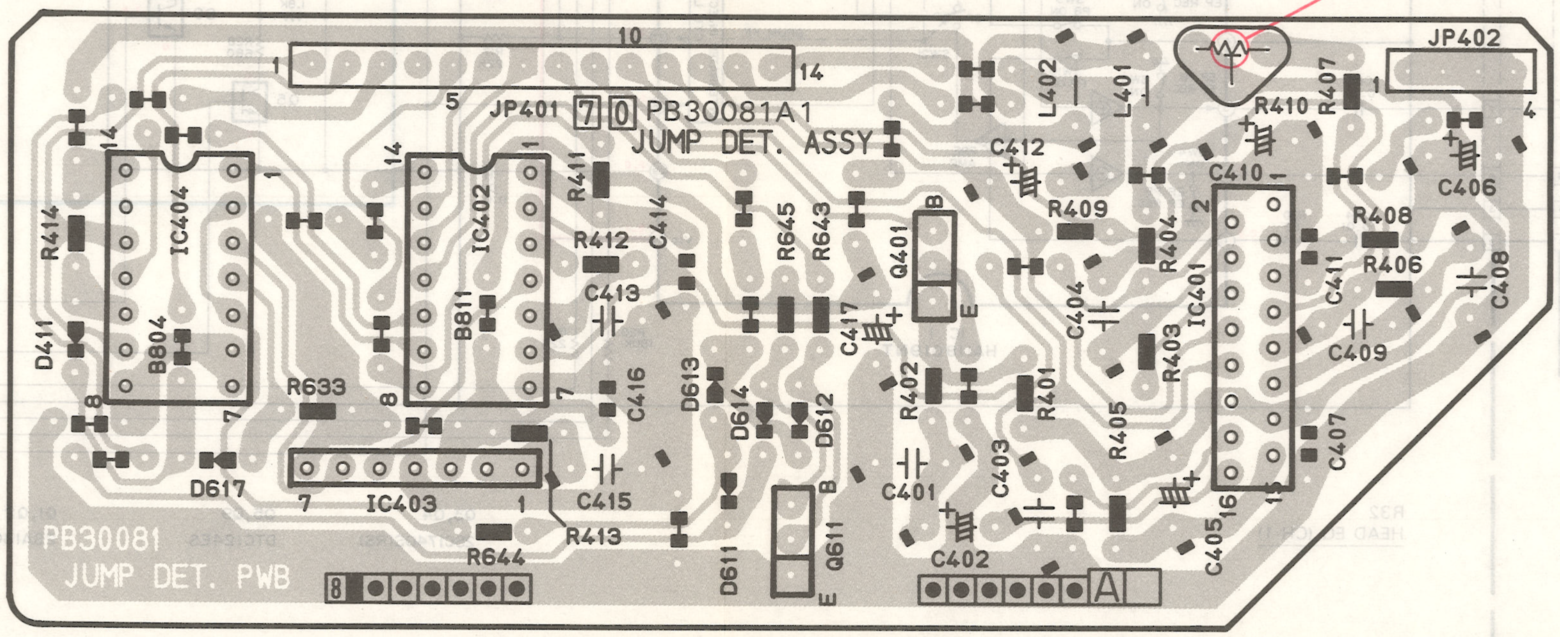

3.22 PRE/REC SCHEMATIC DIAGRAM

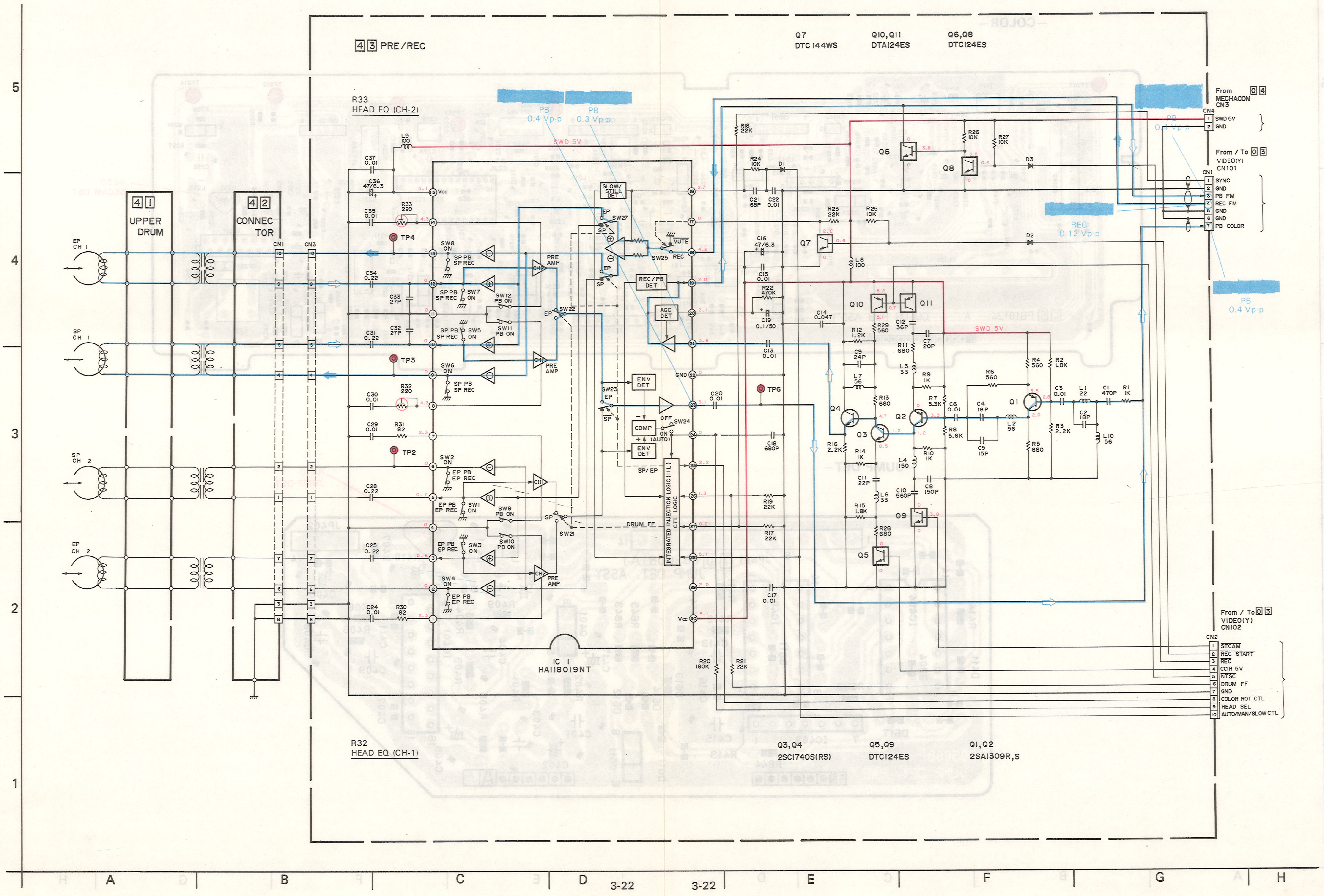

3.23 PRE/REC CIRCUIT BOARD

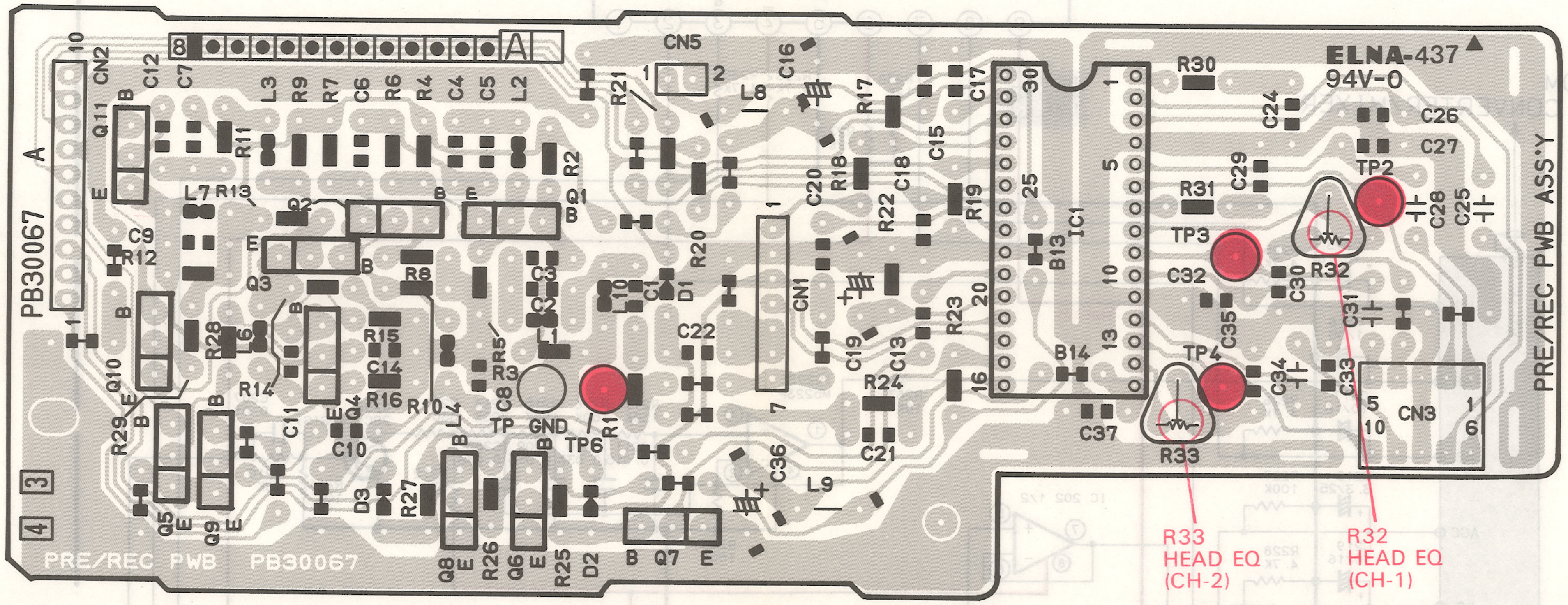

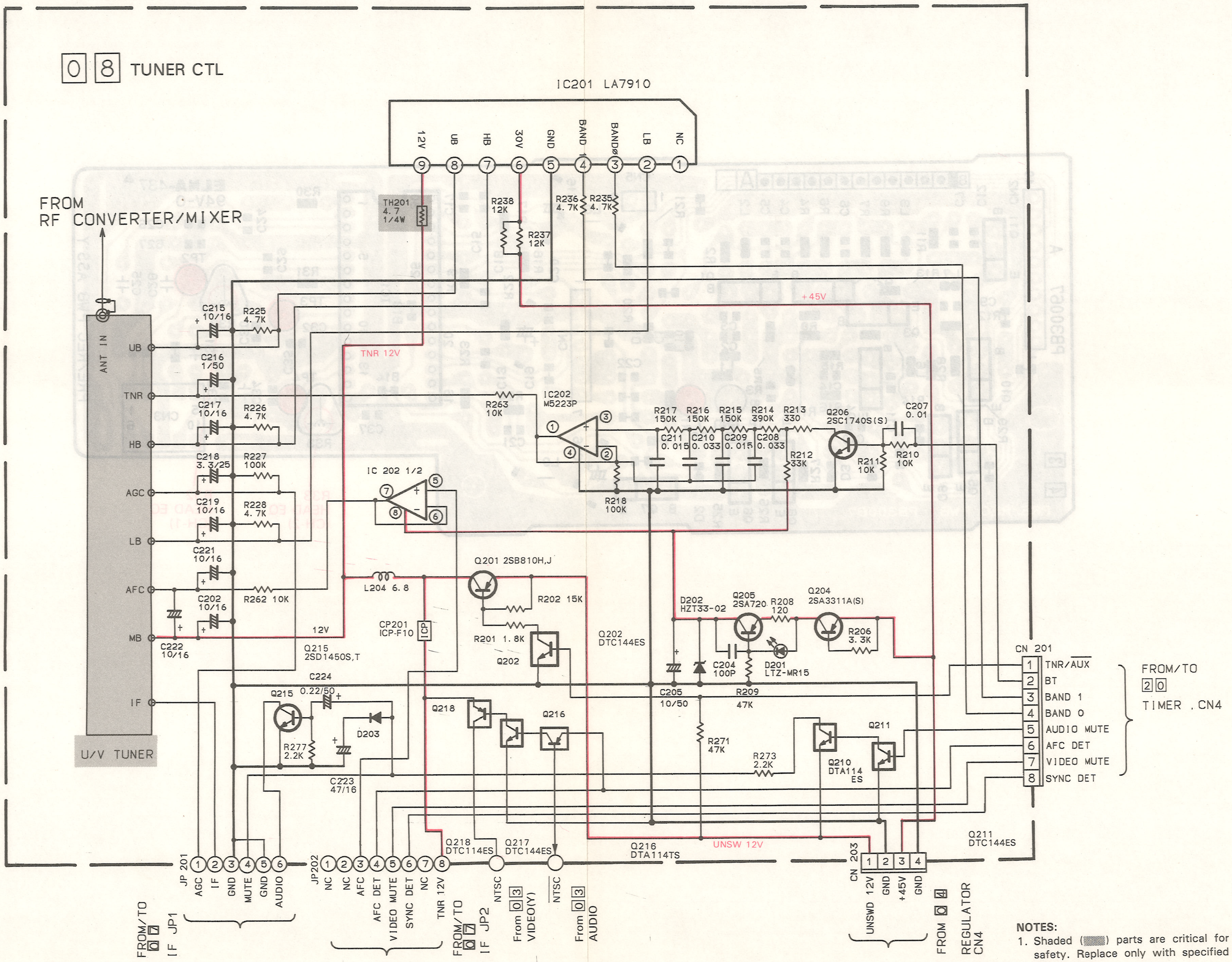

NOTES:
1. Shaded (▒▒) parts are critical for safety. Replace only with specified part numbers.

3.25 TUNER CONTROL/TUNER SUB CIRCUIT BOARD

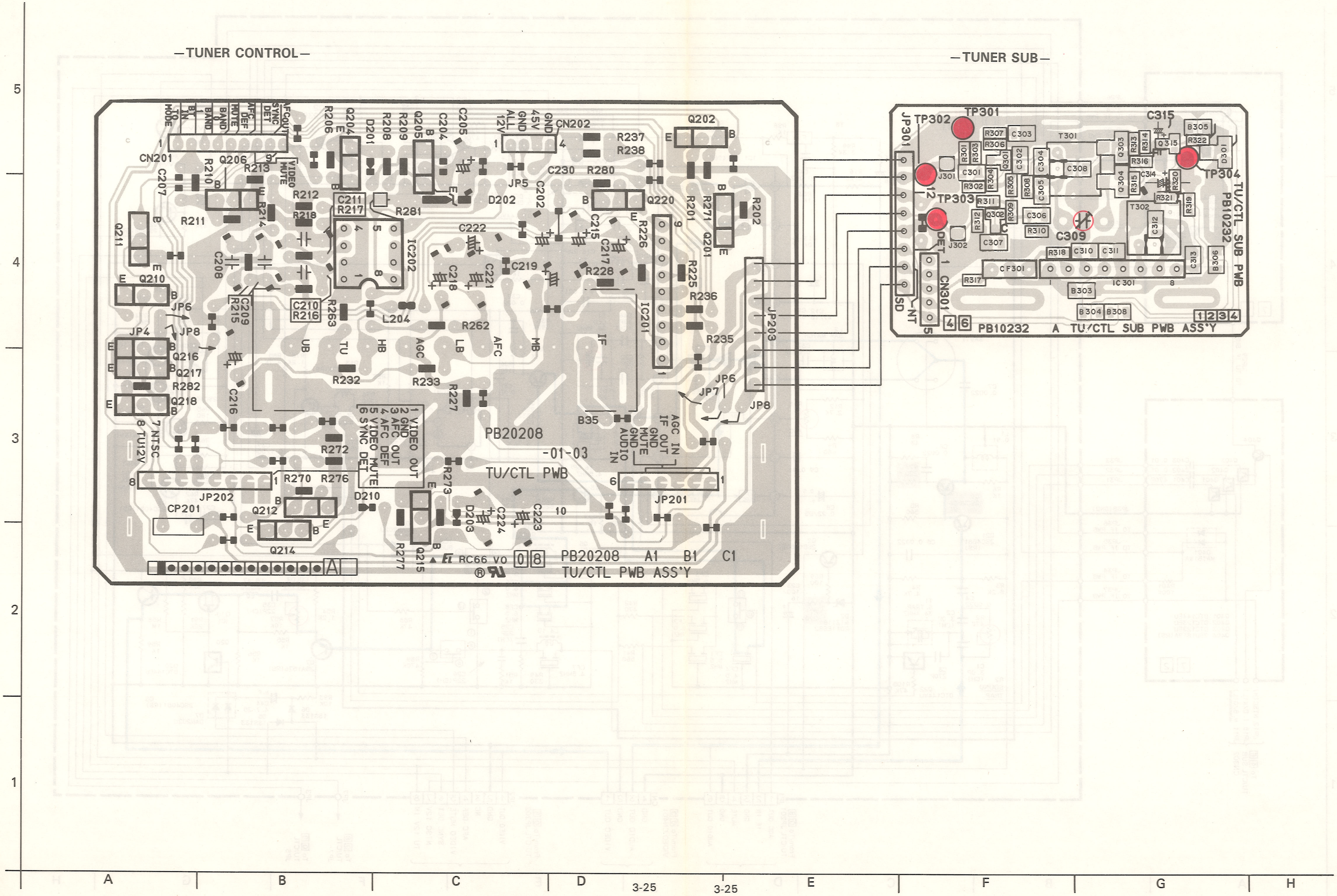

A B C D E F G H

3-25 3-25

3.26 IF SCHEMATIC DIAGRAM

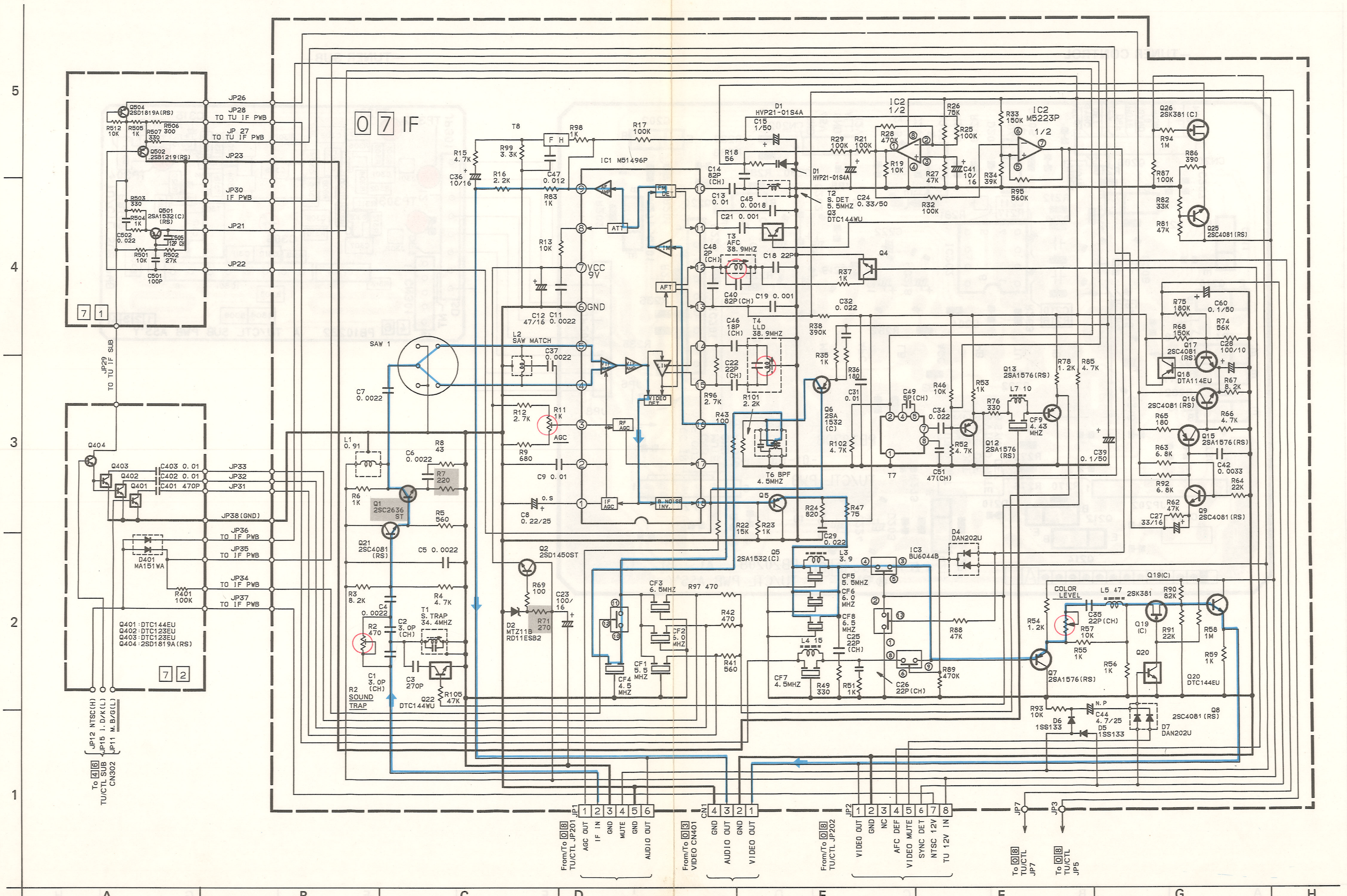

3.27 IF CIRCUIT BOARD

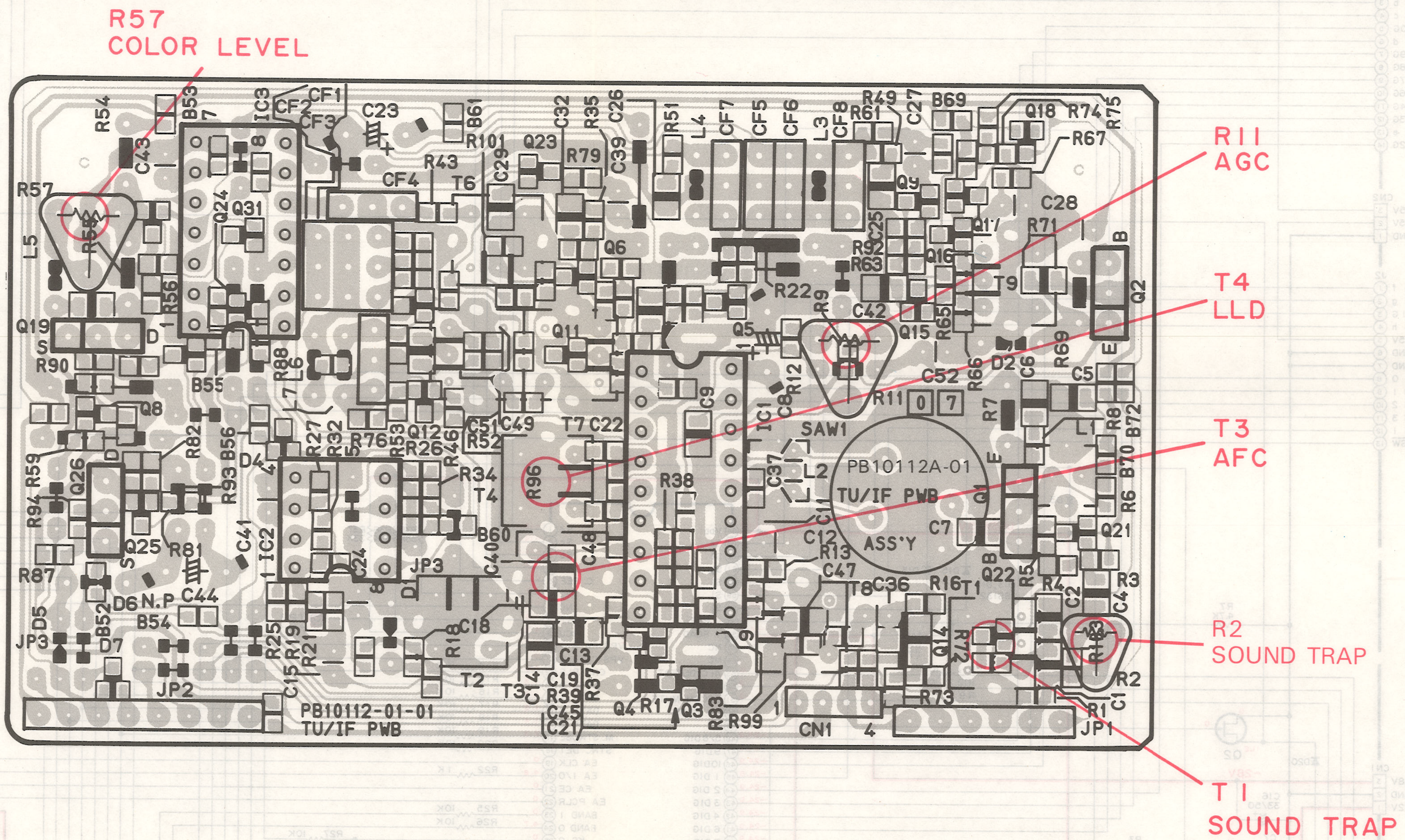

3.28 TIMER AND MEMORY SCHEMATIC DIAGRAMS

NOTE: Shaded (▓▓) parts are critical for safety. Replace only with specified part numbers.

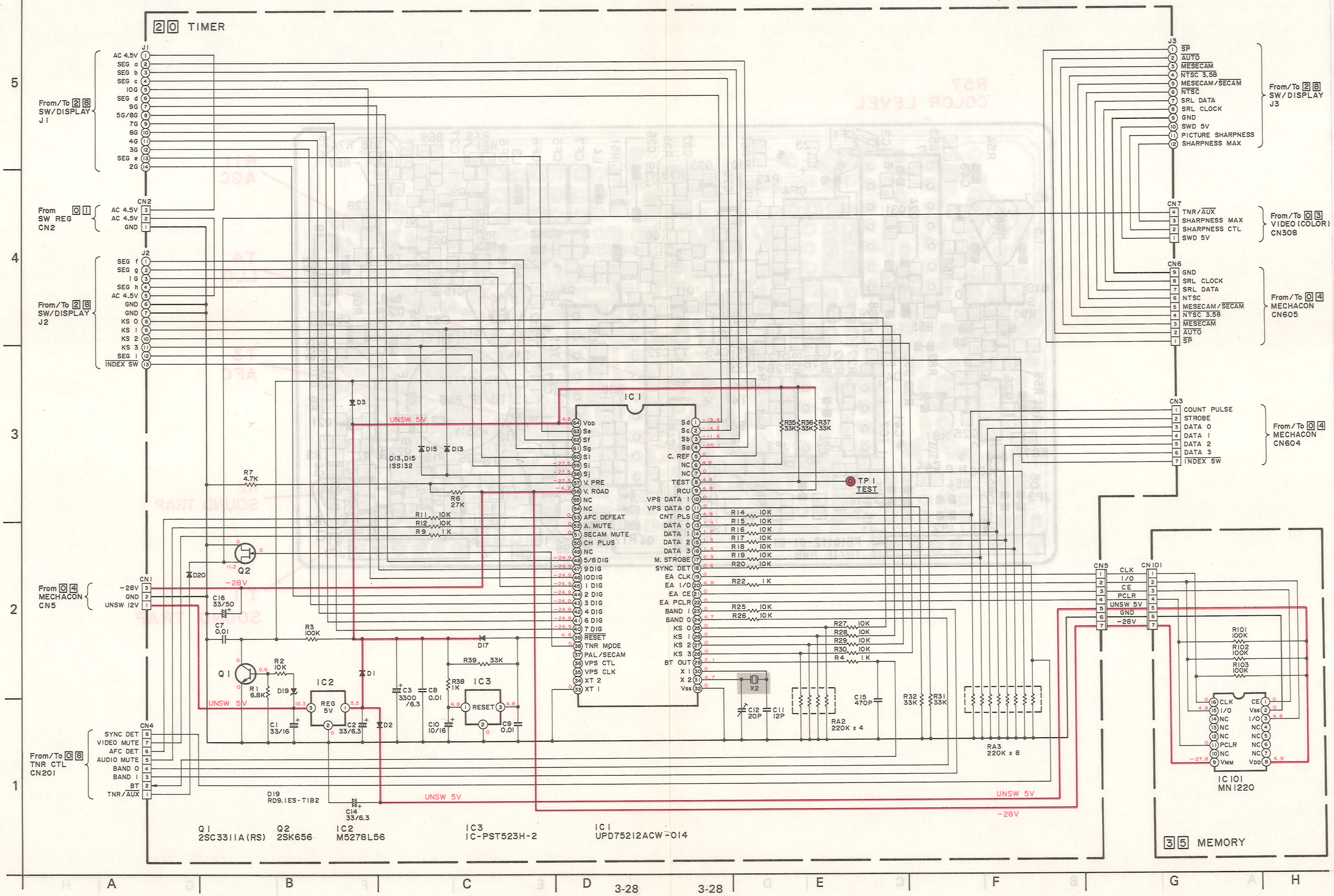

3.29 TIMER AND MEMORY CIRCUIT BOARDS

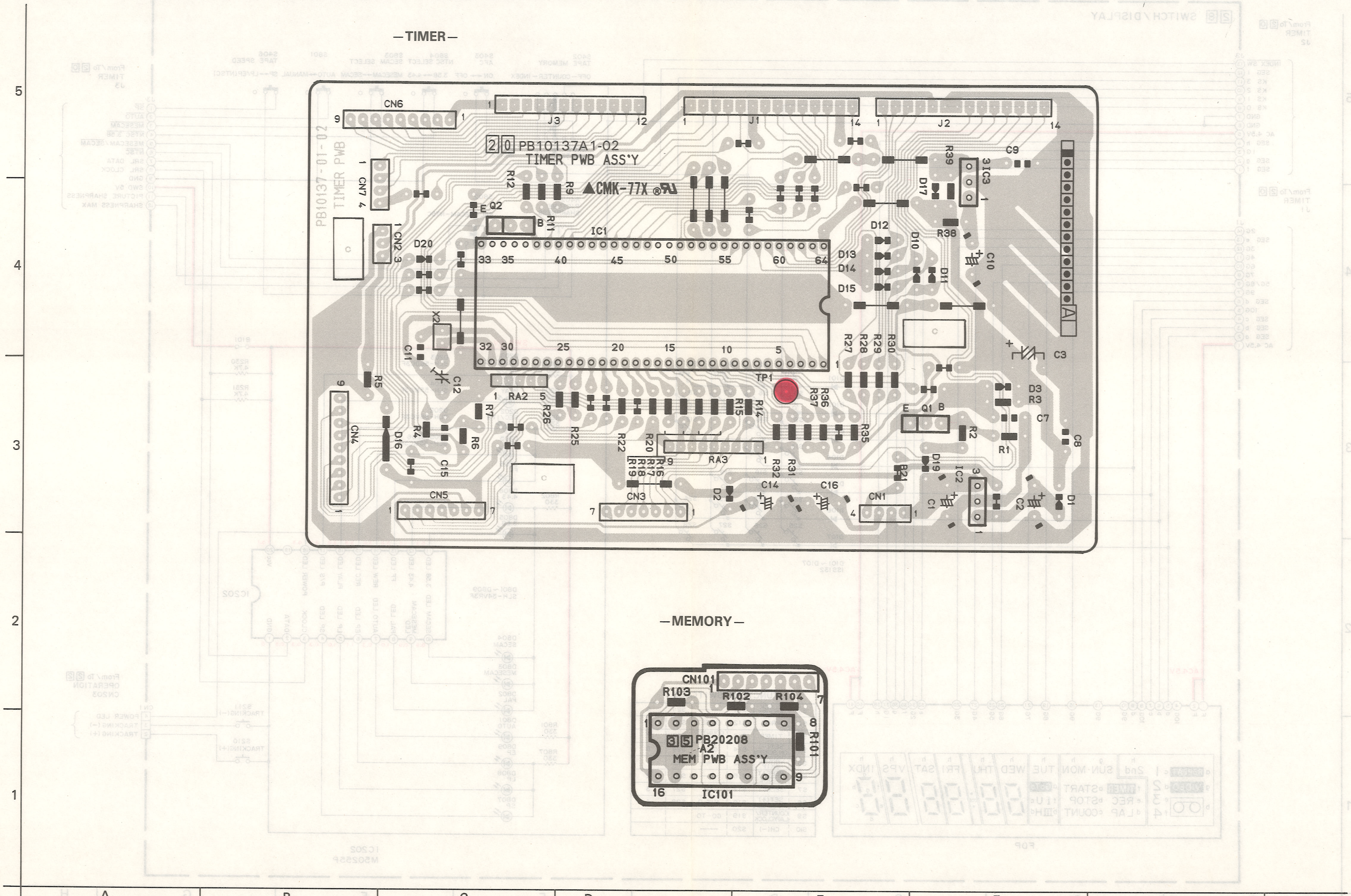

3.30 SWITCH/DISPLAY SCHEMATIC DIAGRAM

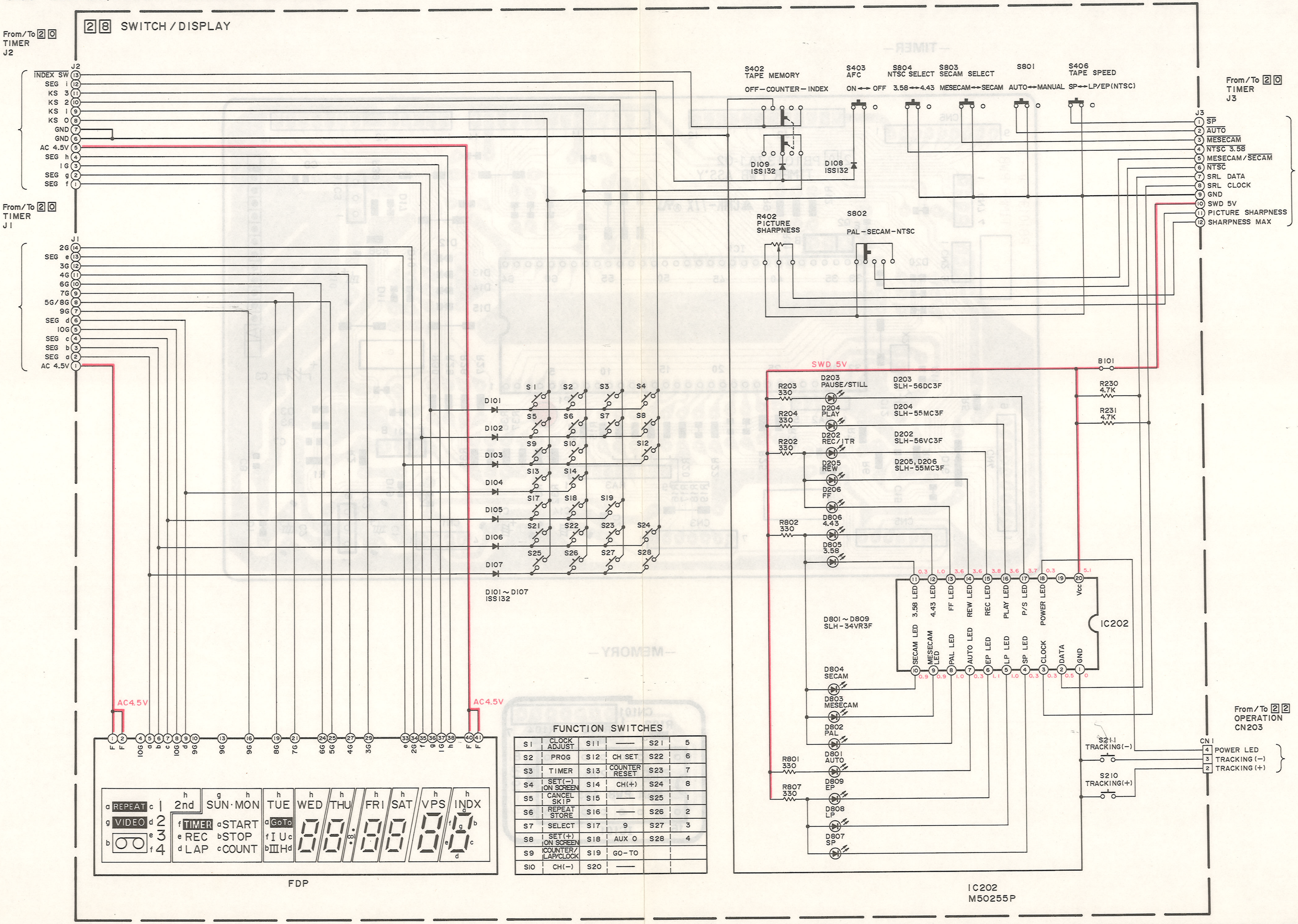

FUNCTION SWITCHES

S1	CLOCK ADJUST	S11	——	S21	5
S2	PROG	S12	CH SET	S22	6
S3	TIMER	S13	COUNTER RESET	S23	7
S4	SET(–) ON SCREEN	S14	CH(+)	S24	8
S5	CANCEL SKIP	S15	——	S25	1
S6	REPEAT STORE	S16	——	S26	2
S7	SELECT	S17	9	S27	3
S8	SET(+) ON SCREEN	S18	AUX 0	S28	4
S9	COUNTER/ LAP/CLOCK	S19	GO-TO		
S10	CH(–)	S20	——		

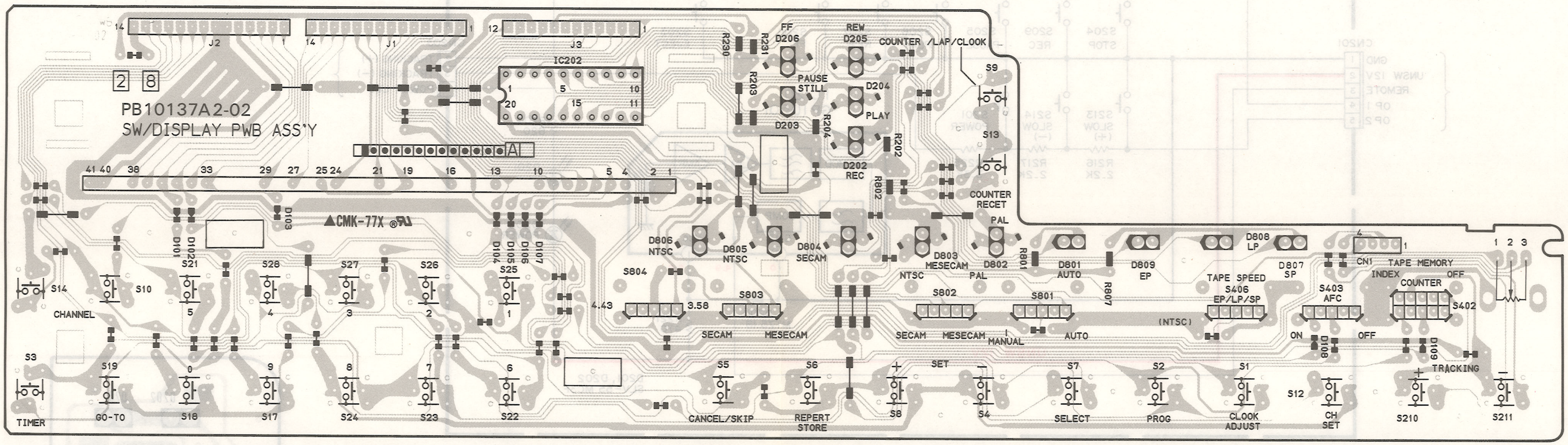

A B C D E F G H

3-31 3-31

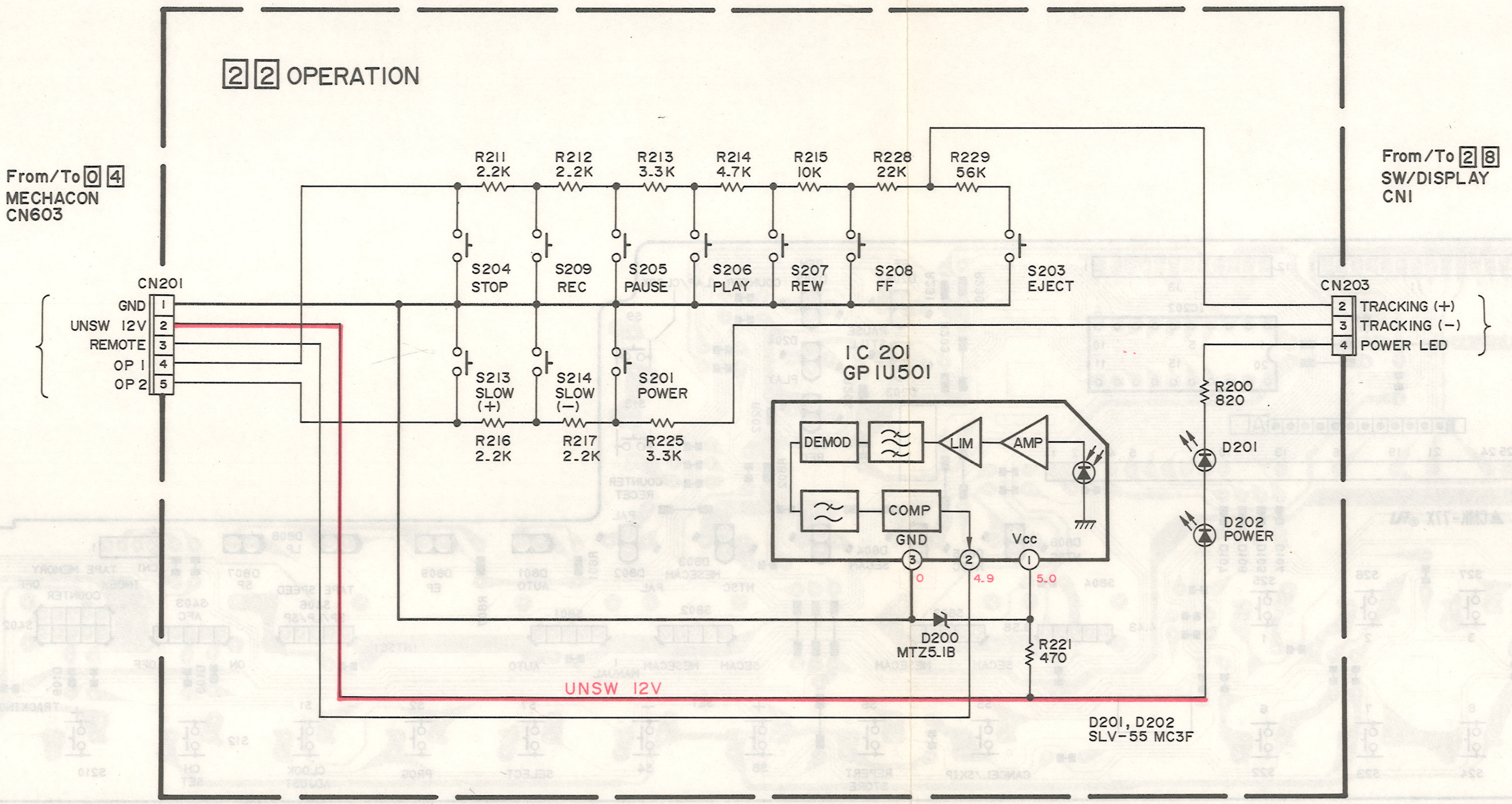
22 OPERATION
From/To 04
MECHACON
CN603
CN201
GND
UNSW 12V
REMOTE
OP 1
OP 2
R211
2.2K
R212
2.2K
R213
3.3K
R214
4.7K
R215
10K
R228
22K
R229
56K
S204
STOP
S209
REC
S205
PAUSE
S206
PLAY
S207
REW
S208
FF
S203
EJECT
S213
SLOW
(+)
S214
SLOW
(−)
S201
POWER
R216
2.2K
R217
2.2K
R225
3.3K
IC 201
GP1U501
DEMOD
LIM
AMP
COMP
GND
Vcc
0
4.9
5.0
D200
MTZ5.1B
R221
470
UNSW 12V
From/To 28
SW/DISPLAY
CN1
CN203
TRACKING (+)
TRACKING (−)
POWER LED
R200
820
D201
D202
POWER
D201, D202
SLV-55 MC3F

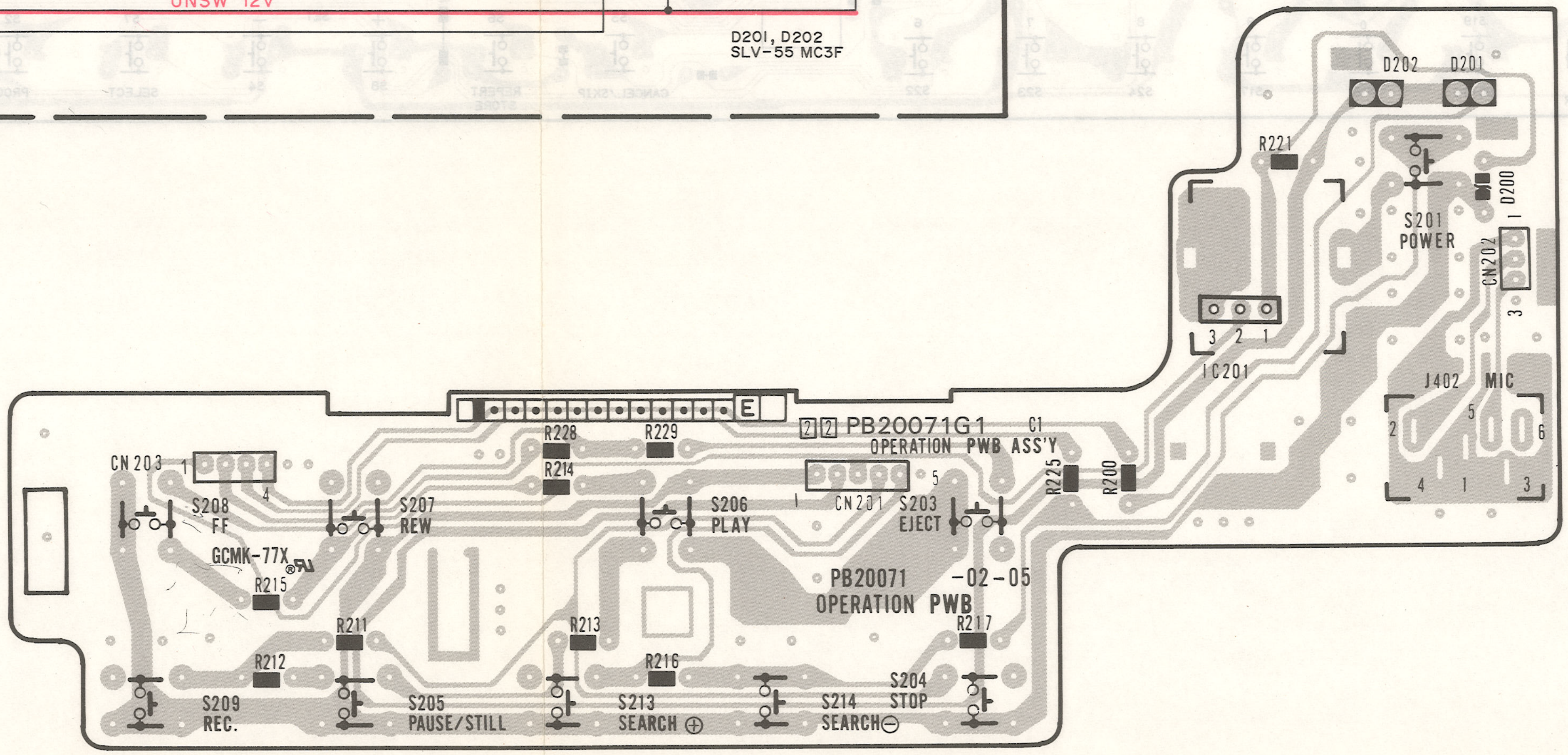
22 PB20071G1
OPERATION PWB ASS'Y
PB20071 -02-05
OPERATION PWB
GCMK-77X
CN203
S208
FF
S207
REW
S206
PLAY
CN201
S203
EJECT
S209
REC.
S205
PAUSE/STILL
S213
SEARCH ⊕
S214
SEARCH⊖
S204
STOP
R228
R229
R214
R215
R211
R212
R213
R216
R217
R225
R200
R221
D202
D201
D200
S201
POWER
CN202
IC201
J402
MIC

3.33 RF CONVERTOR AND MIX BOOSTER SCHEMATIC DIAGRAM

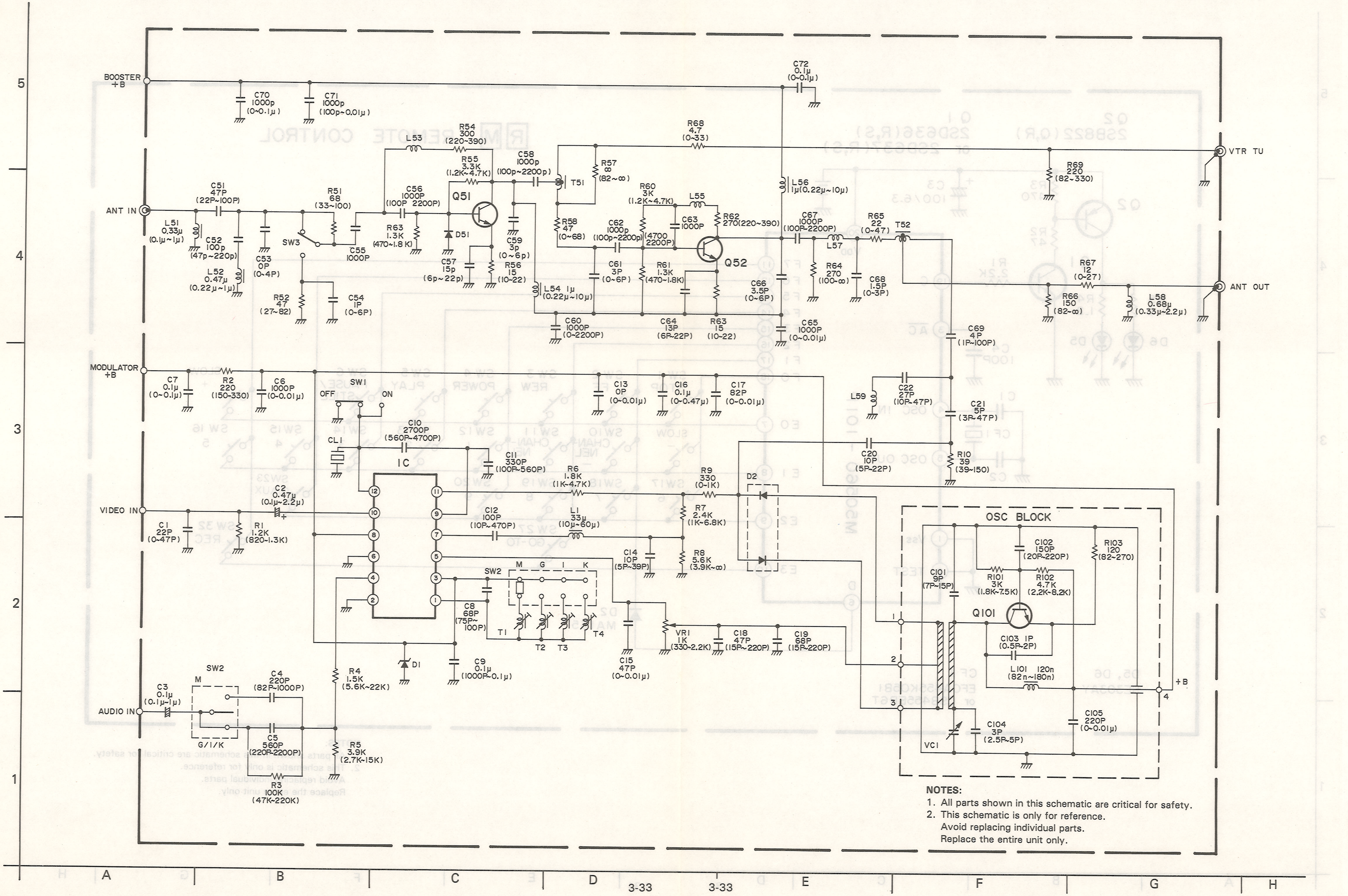

NOTES:
1. All parts shown in this schematic are critical for safety.
2. This schematic is only for reference.
   Avoid replacing individual parts.
   Replace the entire unit only.

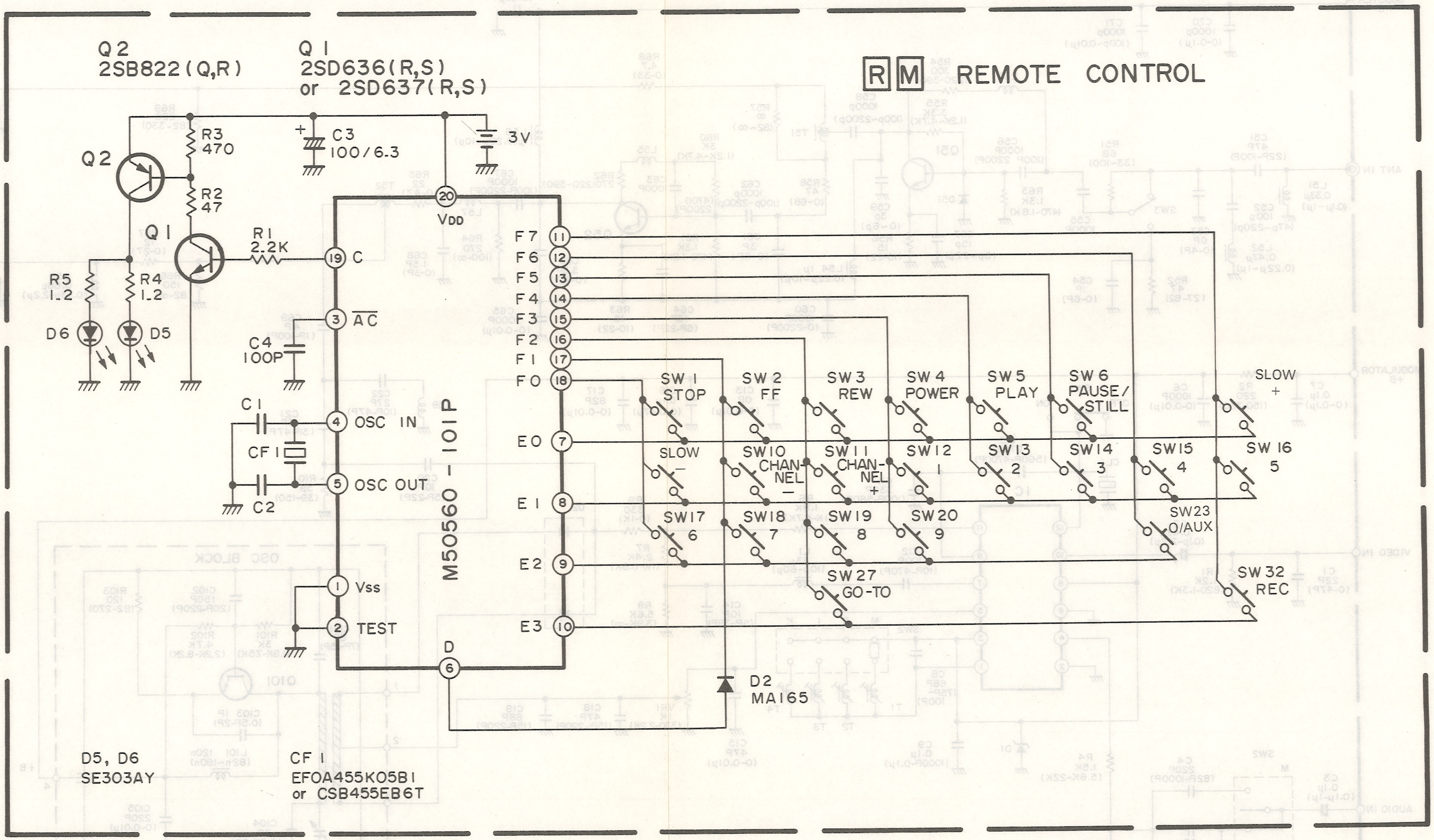

NOTES:
1. All parts shown in this schematic are critical for safety.
2. This schematic is only for reference.
Avoid replacing individual parts.
Replace the entire unit only.

HR-D337MS

REVISED TUNER CONTROL AND IF

This is an addition to the No. 82051 Service Manual for the HR-D337MS model. Insert this to the original and use for units produced on June 1989 and later.

No. 82051B
April 1990

3.24 TUNER CONTROL/TUNER SUB SCHEMATIC DIAGRAM

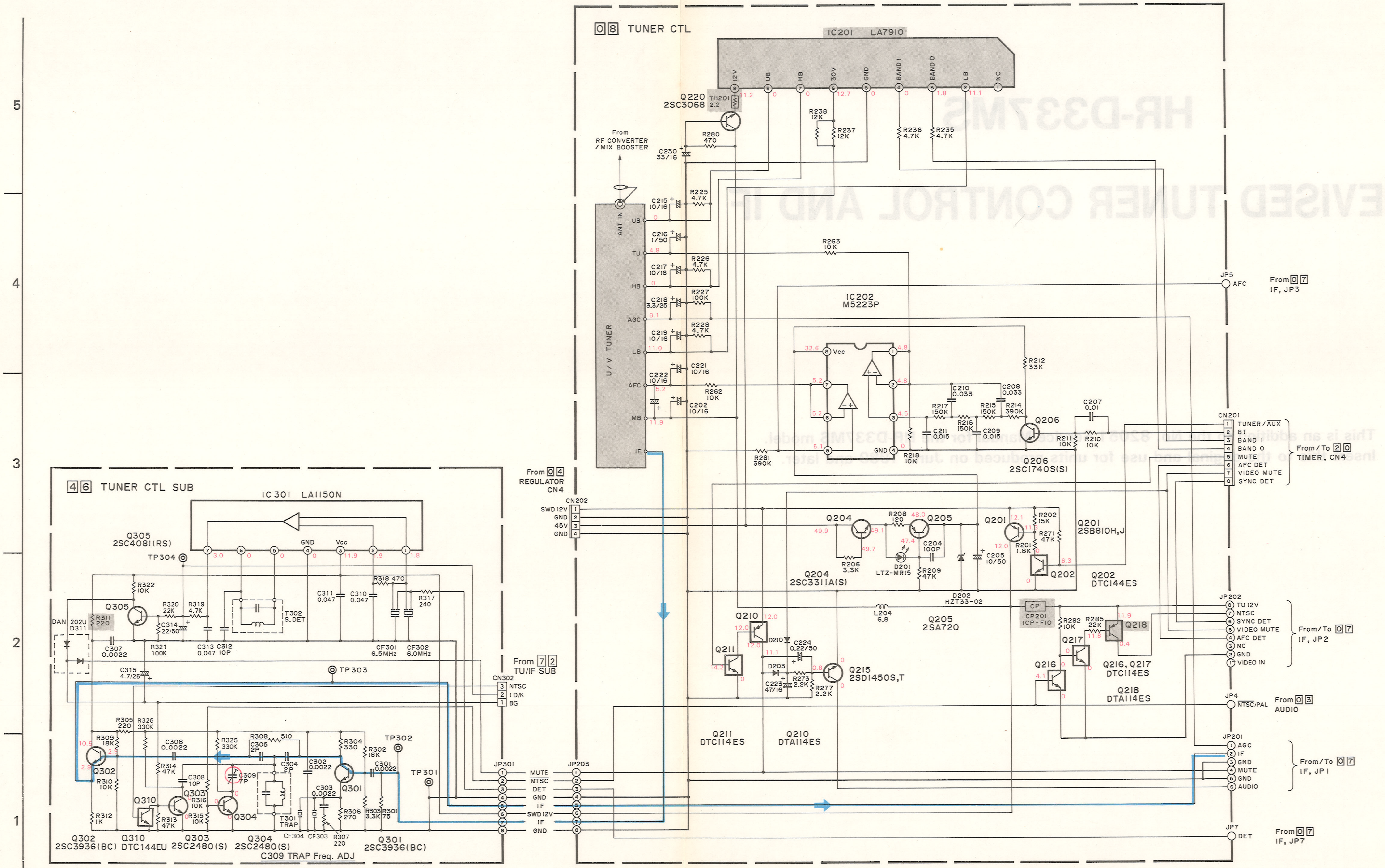

NOTE: Shaded ( ) parts are critical for safety. Replace only with specified part numbers.

3-24

3.25 TUNER CONTROL CIRCUIT BOARD

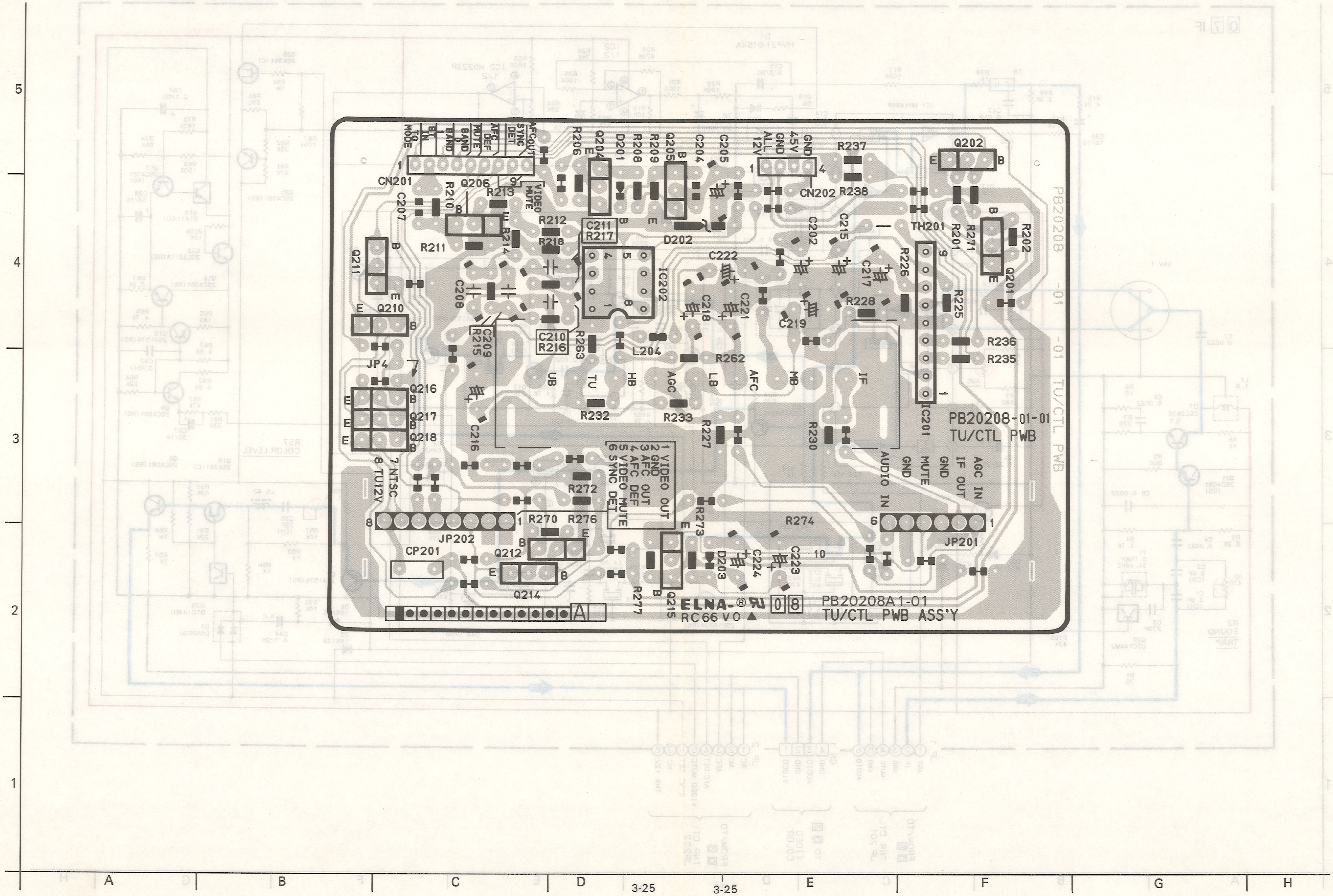

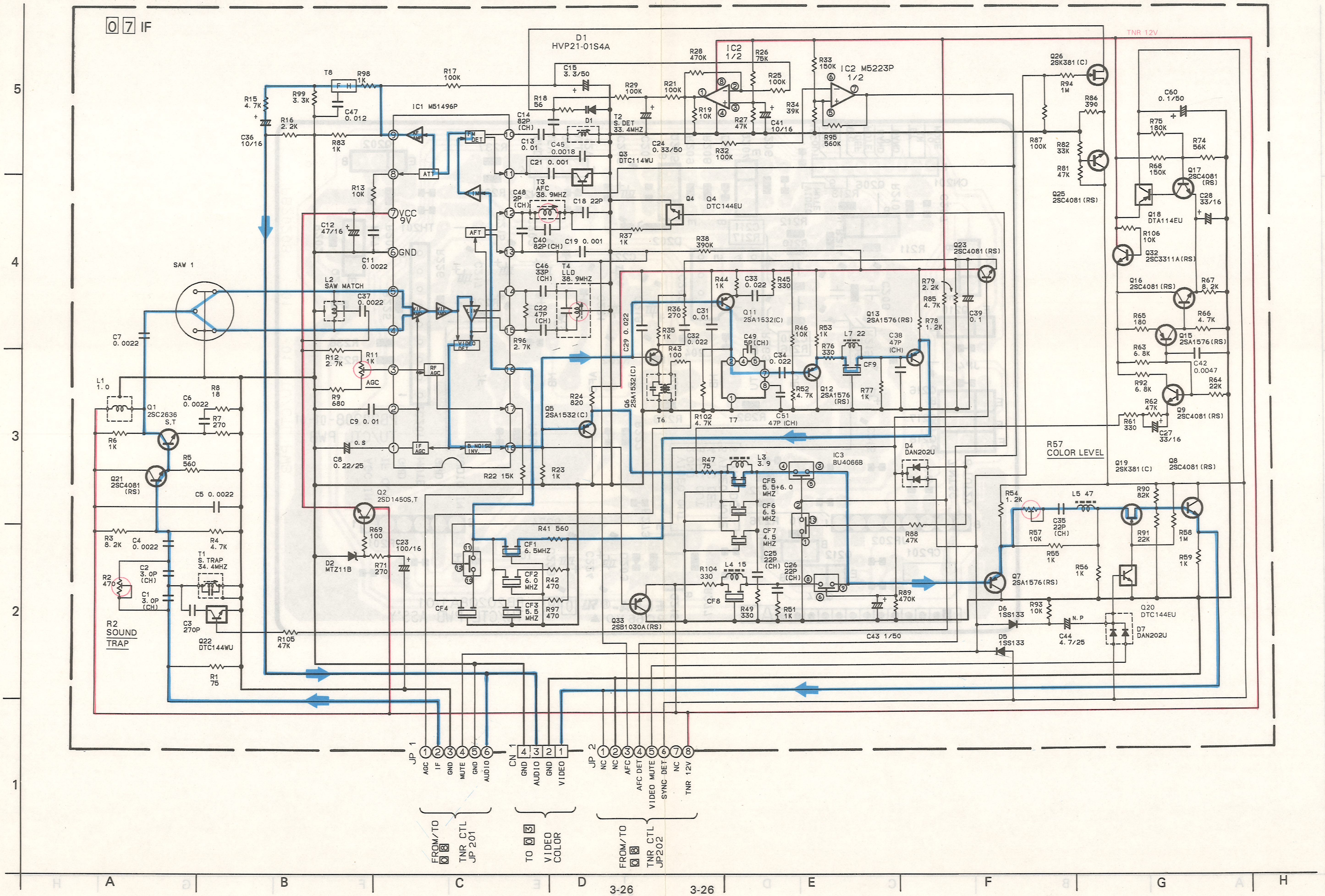

07 IF
D1
HVP21-01S4A
IC1 M51496P
IC2 1/2
IC2 M5223P 1/2
IC3 BU4066B
TNR 12V
SAW 1
L2 SAW MATCH
VCC 9V
GND
AGC
ATT
AFT
FM DET
VIDEO DET
RF AGC
IF AGC
B.NOISE INV.
T1 S.TRAP 34.4MHZ
T2 S.DET 33.4MHZ
T3 AFC 38.9MHZ
T4 LLD 38.9MHZ
T8
Q1 2SC2636 S.T
Q2 2SD1450S.T
Q3 DTC114WU
Q4 DTC144EU
Q5 2SA1532(C)
Q6 2SA1532(C)
Q7 2SA1576(RS)
Q8 2SC4081(RS)
Q9 2SC4081(RS)
Q11 2SA1532(C)
Q12 2SA1576(RS)
Q13 2SA1576(RS)
Q15 2SA1576(RS)
Q16 2SC4081(RS)
Q17 2SC4081(RS)
Q18 DTA114EU
Q19 2SK381(C)
Q20 DTC144EU
Q21 2SC4081(RS)
Q22 DTC144WU
Q23 2SC4081(RS)
Q25 2SC4081(RS)
Q26 2SK381(C)
Q32 2SC3311A(RS)
Q33 2SB1030A(RS)
D2 MTZ11B
D4 DAN202U
D5 1SS133
D6 1SS133
D7 DAN202U
CF1 6.5MHZ
CF2 6.0 MHZ
CF3 5.5 MHZ
CF5 5.5+6.0 MHZ
CF6 6.5 MHZ
CF7 4.5 MHZ
R2 SOUND TRAP
R57 COLOR LEVEL
JP 1
AGC
IF
GND
MUTE
GND
AUDIO
CN 1
GND
AUDIO
GND
VIDEO
JP 2
NC
NC
AFC
AFC DET
VIDEO MUTE
SYNC DET
NC
TNR 12V
FROM/TO 08 TNR CTL JP201
TO 03 VIDEO COLOR
FROM/TO 08 TNR CTL JP202

3.27 IF CIRCUIT BOARD

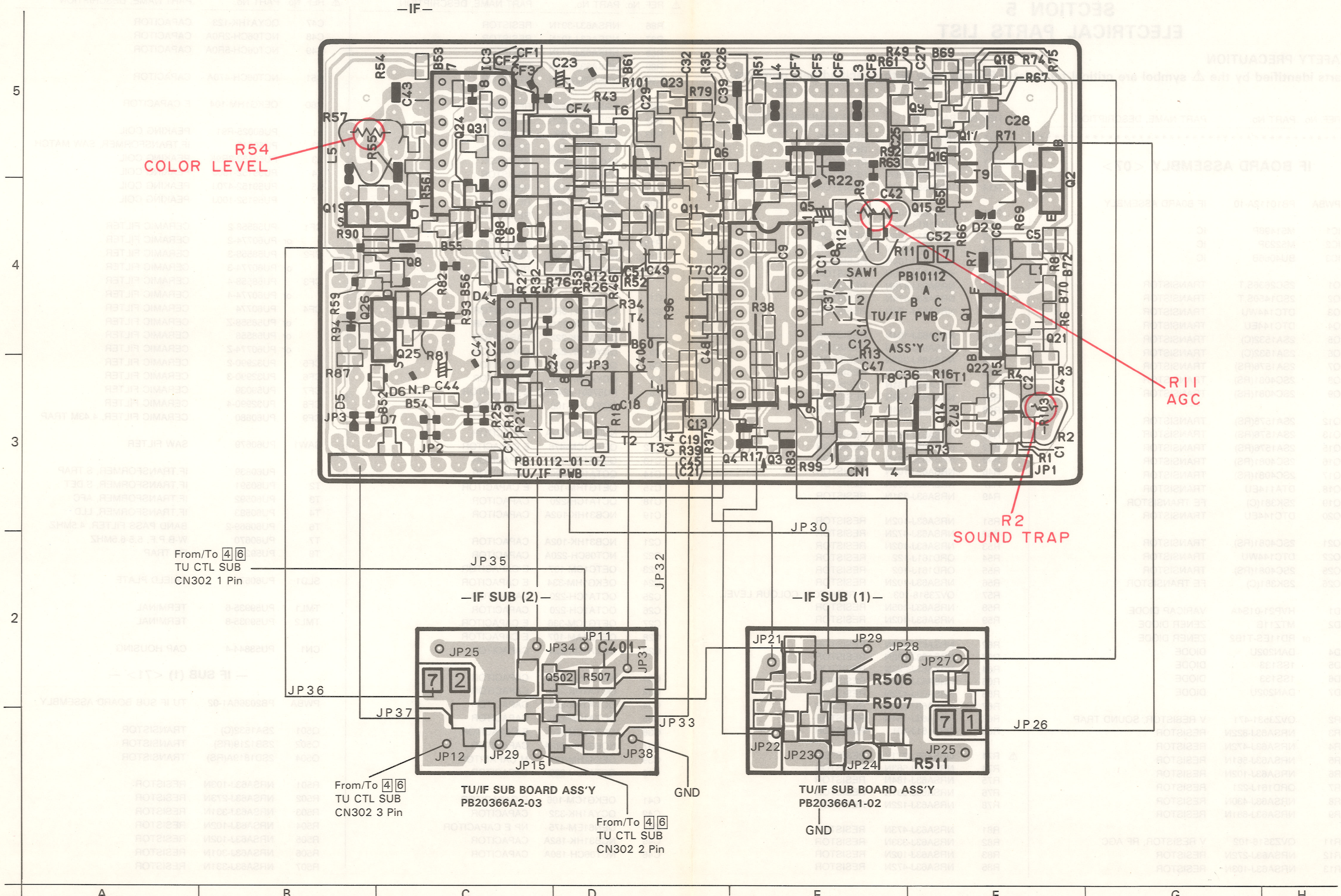

SECTION 5
ELECTRICAL PARTS LIST

SAFETY PRECAUTION
Parts identified by the ⚠ symbol are critical for safety. Replace only with specified part numbers.

IF BOARD ASSEMBLY <07>

⚠	REF. No.	PART No.	PART NAME, DESCRIPTION
	PWBA	PB10112A-10	IF BOARD ASSEMBLY
	IC1	M51496P	IC
	IC2	M5223P	IC
	IC3	BU4066B	IC
⚠	Q1	2SC2636S,T	TRANSISTOR
	Q2	2SD1450S,T	TRANSISTOR
	Q3	DTC144WU	TRANSISTOR
	Q4	DTC144EU	TRANSISTOR
	Q5	2SA1532(C)	TRANSISTOR
	Q6	2SA1532(C)	TRANSISTOR
	Q7	2SA1576(RS)	TRANSISTOR
	Q8	2SC4081(RS)	TRANSISTOR
	Q9	2SC4081(RS)	TRANSISTOR
	Q12	2SA1576(RS)	TRANSISTOR
	Q13	2SA1576(RS)	TRANSISTOR
	Q15	2SA1576(RS)	TRANSISTOR
	Q16	2SC4081(RS)	TRANSISTOR
	Q17	2SC4081(RS)	TRANSISTOR
	Q18	DTA114EU	TRANSISTOR
	Q19	2SK381(C)	FE TRANSISTOR
	Q20	DTC144EU	TRANSISTOR
	Q21	2SC4081(RS)	TRANSISTOR
	Q22	DTC144WU	TRANSISTOR
	Q25	2SC4081(RS)	TRANSISTOR
	Q26	2SK381(C)	FE TRANSISTOR
	D1	HVP21-01S4A	VARICAP DIODE
	D2	MTZ11B	ZENER DIODE
	or	RD11ES-T1B2	ZENER DIODE
	D4	DAN202U	DIODE
	D5	1SS133	DIODE
	D6	1SS133	DIODE
	D7	DAN202U	DIODE
	R2	QVZ3531-471	V RESISTOR, SOUND TRAP
	R3	NRSA63J-822N	RESISTOR
	R4	NRSA63J-472N	RESISTOR
	R5	NRSA63J-561N	RESISTOR
	R6	NRSA63J-102N	RESISTOR
⚠	R7	QRD161J-221	RESISTOR
	R8	NRSA63J-430N	RESISTOR
	R9	NRSA63J-681N	RESISTOR
	R11	QVZ3518-102	V RESISTOR, RF AGC
	R12	NRSA63J-272N	RESISTOR
	R13	NRSA63J-103N	RESISTOR

⚠	REF. No.	PART No.	PART NAME, DESCRIPTION
	R15	NRSA63J-472N	RESISTOR
	R16	NRSA63J-222N	RESISTOR
	R17	QRD181J-104	RESISTOR
	R18	NRSA63J-560N	RESISTOR
	R19	NRSA63J-103N	RESISTOR
	R21	NRSA63J-104N	RESISTOR
	R22	QRD181J-153	RESISTOR
	R23	NRSA63J-102N	RESISTOR
	R24	NRSA63J-821N	RESISTOR
	R25	NRSA63J-104N	RESISTOR
	R26	NRSA63J-753N	RESISTOR
	R27	NRSA63J-473N	RESISTOR
	R28	NRSA63J-474N	RESISTOR
	R29	NRSA63J-104N	RESISTOR
	R32	NRSA63J-104N	RESISTOR
	R33	NRSA63J-154N	RESISTOR
	R34	NRSA63J-393N	RESISTOR
	R35	NRSA63J-102N	RESISTOR
	R36	NRSA63J-181N	RESISTOR
	R37	NRSA63J-102N	RESISTOR
	R38	NRSA63J-394N	RESISTOR
	R41	NRSA63J-561N	RESISTOR
	R42	NRSA63J-471N	RESISTOR
	R43	NRSA63J-101N	RESISTOR
	R46	NRSA63J-103N	RESISTOR
	R47	NRSA63J-750N	RESISTOR
	R49	NRSA63J-331N	RESISTOR
	R51	NRSA63J-102N	RESISTOR
	R52	NRSA63J-472N	RESISTOR
	R53	NRSA63J-102N	RESISTOR
	R54	QRD161J-122	RESISTOR
	R55	QRD161J-102	RESISTOR
	R56	NRSA63J-102N	RESISTOR
	R57	QVZ3518-103	V RESISTOR, COLOUR LEVEL
	R58	NRSA63J-105N	RESISTOR
	R59	NRSA63J-102N	RESISTOR
	R62	NRSA63J-473N	RESISTOR
	R63	NRSA63J-682N	RESISTOR
	R64	NRSA63J-223N	RESISTOR
	R65	NRSA63J-181N	RESISTOR
	R66	NRSA63J-472N	RESISTOR
	R67	NRSA63J-822N	RESISTOR
	R68	NRSA63J-154N	RESISTOR
	R69	QRD161J-101	RESISTOR
⚠	R71	QRSA08J-271YN	RESISTOR
	R74	NRSA63J-563N	RESISTOR
	R75	NRSA63J-184N	RESISTOR
	R76	NRSA63J-331N	RESISTOR
	R78	NRSA63J-122N	RESISTOR
	R81	NRSA63J-473N	RESISTOR
	R82	NRSA63J-333N	RESISTOR
	R83	NRSA63J-102N	RESISTOR
	R85	NRSA63J-472N	RESISTOR

⚠	REF. No.	PART No.	PART NAME, DESCRIPTION
	R86	NRSA63J-391N	RESISTOR
	R87	NRSA63J-104N	RESISTOR
	R88	NRSA63J-473N	RESISTOR
	R89	NRSA63J-474N	RESISTOR
	R90	NRSA63J-823N	RESISTOR
	R91	NRSA63J-223N	RESISTOR
	R92	NRSA63J-682N	RESISTOR
	R93	QRD161J-103	RESISTOR
	R94	NRSA63J-105N	RESISTOR
	R95	NRSA63J-564N	RESISTOR
	R96	NRSA63J-272N	RESISTOR
	R97	NRSA63J-471N	RESISTOR
	R98	NRSA63J-102N	RESISTOR
	R99	NRSA63J-332N	RESISTOR
	R101	NRSA63J-222N	RESISTOR
	R102	NRSA63J-472N	RESISTOR
	R105	QRD181J-473	RESISTOR
	C1	QCTA1CH-3R0	CAPACITOR
	C2	QCTA1CH-3R0	CAPACITOR
	C3	NCB31HK-271A	CAPACITOR
	C4	QCYA1HK-222	CAPACITOR
	C5	QCYA1HK-222	CAPACITOR
	C6	QCYA1HK-222	CAPACITOR
	C7	QCYA1HK-222	CAPACITOR
	C8	PU57601-224MEZ	E CAPACITOR
	C9	QCYA1HK-103	CAPACITOR
	C11	NCB31HK-222A	CAPACITOR
	C12	QETG1CM-476	E CAPACITOR
	C13	QCYA1HK-103	CAPACITOR
	C14	QCTA1CH-820	CAPACITOR
	C15	QETG1HM-105	E CAPACITOR
	C18	QCTA1CH-220	CAPACITOR
	C19	NCB31HK-102A	CAPACITOR
	C21	NCB31HK-102A	CAPACITOR
	C22	NCT06CH-220A	CAPACITOR
	C23	QETC1CM-107	E CAPACITOR
	C24	QEKG1HM-334	E CAPACITOR
	C25	QCTA1CH-220	CAPACITOR
	C26	QCTA1CH-220	CAPACITOR
	C27	QETG1CM-336	E CAPACITOR
	C28	QEKG1AM-107	E CAPACITOR
	C29	QCYA1HK-223	CAPACITOR
	C31	NCF31HZ-103A	CAPACITOR
	C32	QCYA1HK-223	CAPACITOR
	C34	QCYA1HK-223	CAPACITOR
	C35	QCTA1CH-220	CAPACITOR
	C36	QETA1CM-106	E CAPACITOR
	C37	NCB31HK-222A	CAPACITOR
	C39	QEK41HM-104	M CAPACITOR
	C40	QCTA1CH-820	CAPACITOR
	C41	QEKG1CM-106	E CAPACITOR
	C42	QCYA1HK-332	CAPACITOR
	C44	QEN61EM-475	NP E CAPACITOR
	C45	NCB31HK-182A	CAPACITOR
	C46	NCT06CH-180A	CAPACITOR

⚠	REF. No.	PART No.	PART NAME, DESCRIPTION
	C47	QCYA1HK-123	CAPACITOR
	C48	NCT06CH-2R0A	CAPACITOR
	C49	NCT06CH-5R0A	CAPACITOR
	C51	NCT06CH-470A	CAPACITOR
	C60	QEKG1HM-104	E CAPACITOR
	L1	PU60025-R91	PEAKING COIL
	L2	PU60519	IF.TRANSFORMER, SAW MATCH
	L3	PU59152-3R9K	PEAKING COIL
	L4	PU59152-150J	PEAKING COIL
	L5	PU59152-470J	PEAKING COIL
	L7	PU59152-100J	PEAKING COIL
	CF1	PU58558-2	CERAMIC FILTER
	or	PU60774-2	CERAMIC FILTER
	CF2	PU58558-3	CERAMIC FILTER
	or	PU60774-3	CERAMIC FILTER
	CF3	PU58558-4	CERAMIC FILTER
	or	PU60774-4	CERAMIC FILTER
	CF4	PU60774	CERAMIC FILTER
	or	PU58558-Z	CERAMIC FILTER
	or	PU58558	CERAMIC FILTER
	or	PU60774-Z	CERAMIC FILTER
	CF5	PU32990-2	CERAMIC FILTER
	CF6	PU32990-3	CERAMIC FILTER
	CF7	PU59039	CERAMIC FILTER
	CF8	PU32990-4	CERAMIC FILTER
	CF9	PU60680	CERAMIC FILTER, 4.43M TRAP
	SAW1	PU60679	SAW FILTER
	T1	PU60839	IF.TRANSFORMER, S.TRAP
	T2	PU60591	IF.TRANSFORMER, S.DET
	T3	PU60592	IF.TRANSFORMER, AFC
	T4	PU60593	IF.TRANSFORMER, LLD
	T6	PU60669-2	BAND PASS FILTER, 4.5MHZ
	T7	PU60670	W-B.P.F, 5.5-6.5MHZ
	T8	PU59243	FH TRAP
	SLD1	PU60678	SHIELD PLATE
	TML1	PU59935-6	TERMINAL
	TML2	PU59935-8	TERMINAL
	CN1	PU58844-4	CAP HOUSING

— IF SUB (1) <71> —

⚠	REF. No.	PART No.	PART NAME, DESCRIPTION
	PWBA	PB20366A1-02	TU IF SUB BOARD ASSEMBLY
	Q501	2SA1532(C)	TRANSISTOR
	Q502	2SB1219(RS)	TRANSISTOR
	Q504	2SD1819A(RS)	TRANSISTOR
	R501	NRSA63J-103N	RESISTOR
	R502	NRSA63J-273N	RESISTOR
	R503	NRSA63J-331N	RESISTOR
	R504	NRSA63J-102N	RESISTOR
	R505	NRSA63J-102N	RESISTOR
	R506	NRSA63J-301N	RESISTOR
	R507	NRSA63J-331N	RESISTOR

SECTION 4
EXPLODED VIEWS AND PARTS LIST

4.1 PACKING ASSEMBLY <M1>

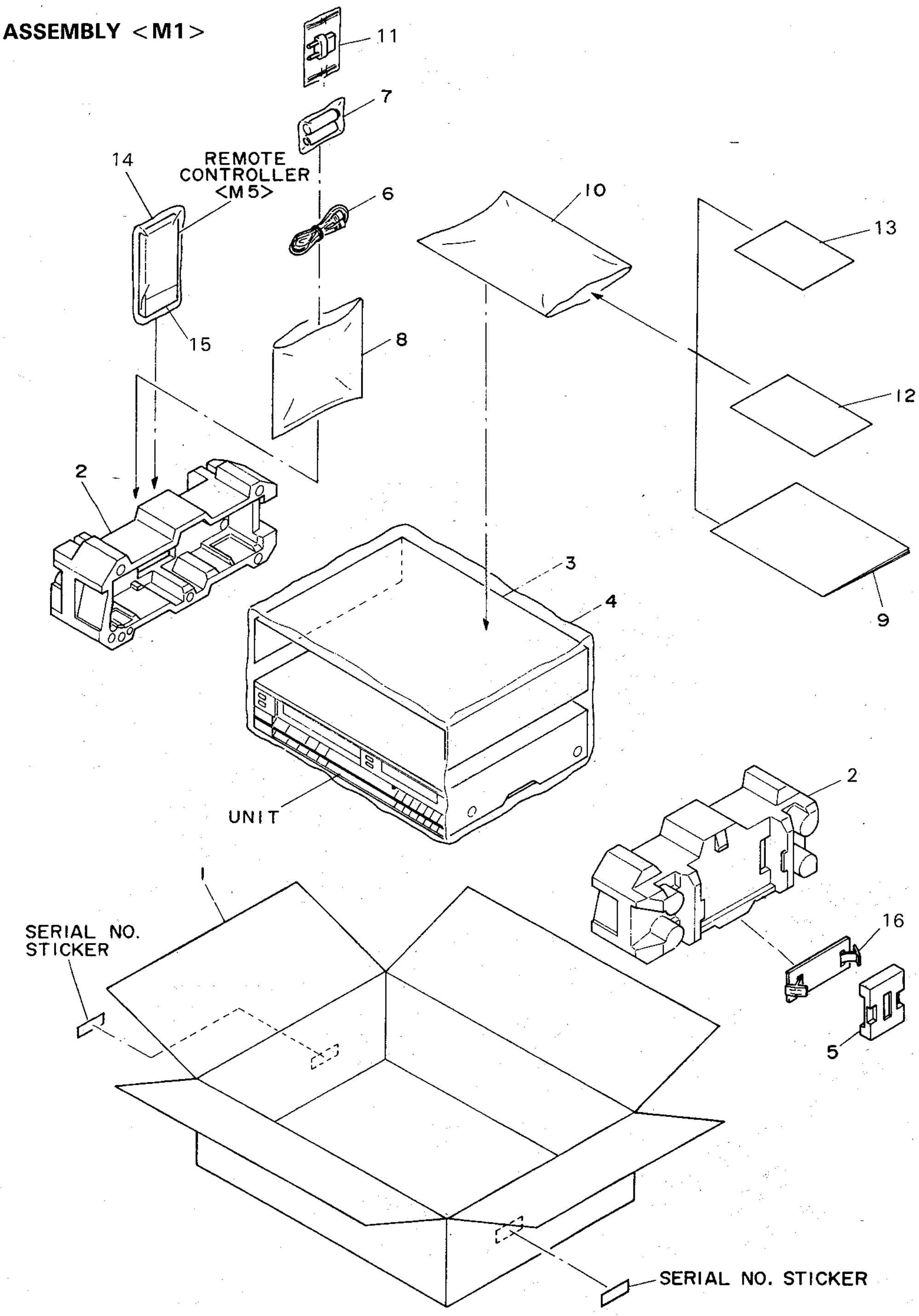

#⚠	REF NO.	PART NO.	PART NAME, DESCRIPTION
			PACKING ASSEMBLY <M1>
	1	PQ32440	PACKING CASE
	2	PQ32157A-1	CUSHION ASSY
	3	PQ41026-19	PROTECT SHEET
	4	PQM30021-69	POLY BAG
	5	PQ32196	CUSHION
⚠	6	PU59168-3	RF CABLE
⚠		OR PU59167-3	RF CABLE
	7	UM-4NJ2P	BATTERY
	8	QPGA020-02003	POLY BAG
⚠	9	PU30425-987	INSTRUCTIONS
	10	QPGA025-03505	POLY BAG
⚠	11	QMC0271-001	CONVERSION PLUG
	12	TCN-3318	TAPE CATALOG
	13	TCN-3379	TAPE CATALOG
⚠	14	PQ10474C	REMOTE CONTROLLER
	15	PQ31361	BATTERY CAP
	16	PQ31424A	HANDLE ASS'Y

4.2 CABINET ASSEMBLY <M2>

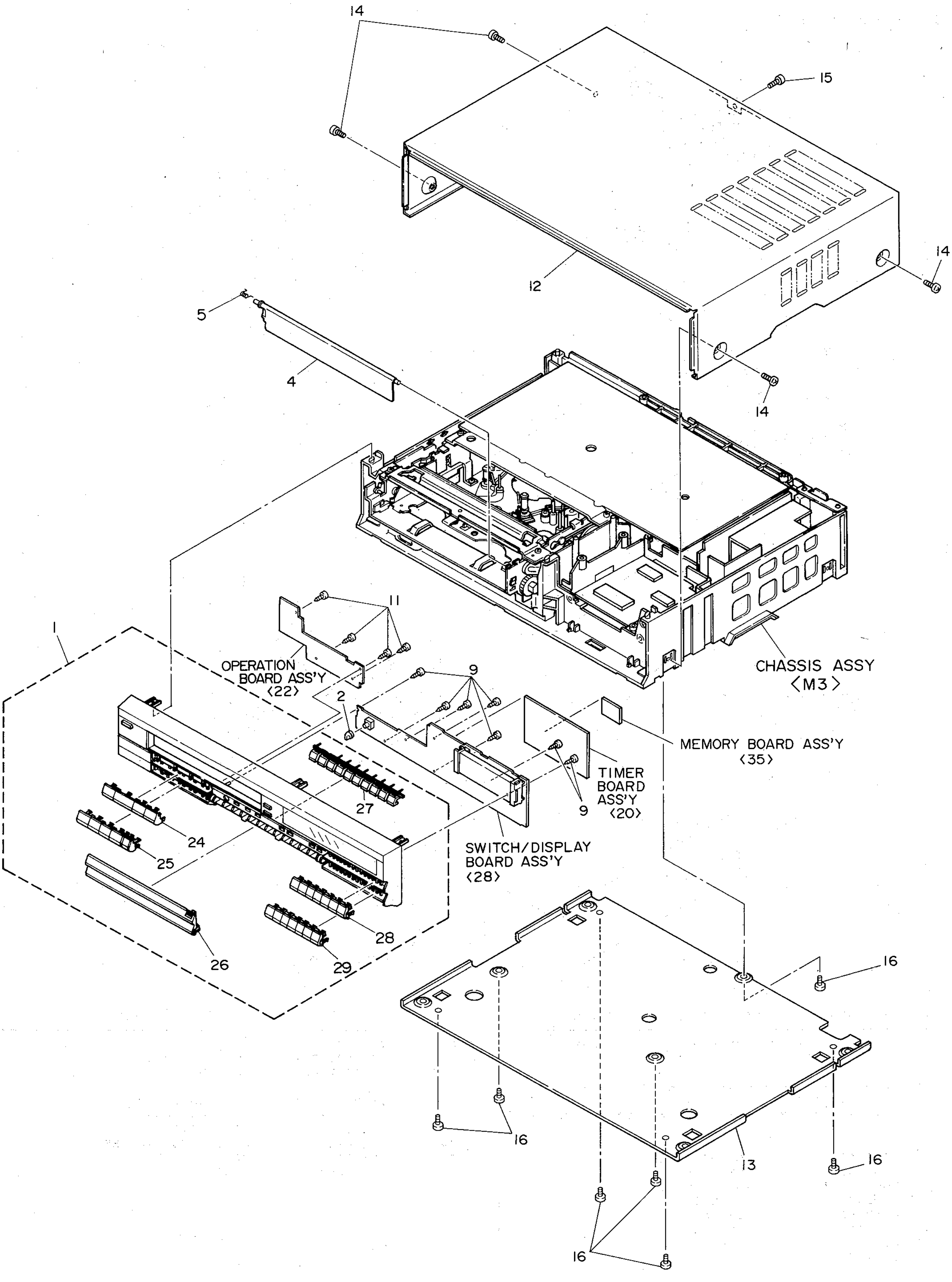

#⚠	REF NO.	PART NO.	PART NAME, DESCRIPTION
			CABINET ASSEMBLY <M2>
	1	PQ10593C-11	FRONT PANEL ASSY
	2	PQ43081	KNOB(S.VOL.)
	4	PQ31267-144	C.HOUSING DOOR
	5	PQ42410-1-1	TORSION SPRING
	9	SDSF2608Z	TAPPING SCREW,X7
	11	SDSF2608Z	TAPPING SCREW,X4
⚠	12	PQ10545	TOP COVER
⚠	13	PQ10579	BOTTOM COVER
	14	SDSA4014M	TAPPING SCREW,X4
	15	SDSF3010M	TAPPING SCREW,X1
	16	SDSF3008Z	TAPPING SCREW,X7
	24	PQ31729-5	BUTTON(OPE)
	25	PQ20493	BUTTON(OPE)
	26	PQ20442-9-12	DOOR
	27	PQ20443-8	BUTTON(PROG.)
	28	PQ31734-14	BUTTON(TEN KEY)
	29	PQ31734-15	BUTTON(TEN KEY)

#⚠	REF NO.	PART NO.	PART NAME, DESCRIPTION
			CHASSIS ASSEMBLY <M3>
	1	PQ43013	FOOT,X2
	2	PQ43023	EARTH PLATE
	4	SDSP2608Z	SCREW,X3 FOR DRUM ASSY
	5	SDSA4014Z	TAPPING SCREW,X2
	6	PQ41396	SPECIAL SCREW,M.DECK
	7	PUS28277H	CASS.HOUSING ASSY
	8	SDST2605Z	TAPPING SCREW,X2.C HOUSING
	9	SDST2605Z	TAPPING SCREW, X2
	10	SDSA4012Z	TAPPING SCREW,X2
	11	GPSF2610Z	TAPPING SCREW,X2
	12	SDSF3008Z	TAPPING SCREW,X2
	13	PQ43012	EARTH PLATE
	14	SDST2605Z	TAPPING SCREW
	15	SDSA2608Z	TAPPING SCREW,X2
	16	GPSF2610Z	TAPPING SCREW
	17	SDSF3008Z	TAPPING SCREW,X2
	18	GPST2608Z	SCREW,X2
	19	PQ43398	BRACKET
⚠	20	PQ20625	TERMINAL BOARD ASSY
	21	PQ31171-4	DRUM SHIELD
	22	SDST2605Z	TAPPING SCREW,X2 D SHIELD
⚠	25	PQ32492	TRANS BRACKET
⚠	26	QMP7340-200A	POWER CORD
⚠	27	QHS3771-108	STRAIN RELIEF
	30	SDSF3008Z	TAPPING SCREW
	31	PDM2008D-5	UPPER DRUM ASSY
	32	PDM4165A	DRUM SCREW ASSY,X2
	33	PDM2053B-15	LOWER DRUM MOTOR ASSY
	34	PDM4015B	BRUSH ASSY
	35	LPSP2606Z	SCREW
⚠	41	PQ42385A	CASSETTE MOTOR ASSY
⚠	OR	PQ42385B	CASSETTE MOTOR ASSY
	42	SPSP2603Z	SCREW,X2
	43	PQM30003-19	BELT
	44	SPSP2604Z	SCREW
	45	SPST2605Z	TAPPING SCREW,X2
	46	DV710SR223M16	VARISTOR
	51	SDSF3008Z	TAPPING SCREW,X2
	52	SDSF3010M	TAPPING SCREW
	53	PQ32490	COVER
	54	PQ32488	SHIELD PLATE
	55	PQ43646	EARTH PLATE
	56	SBSB3008Z	SCREW

4.3 CHASSIS ASSEMBLY <M3>

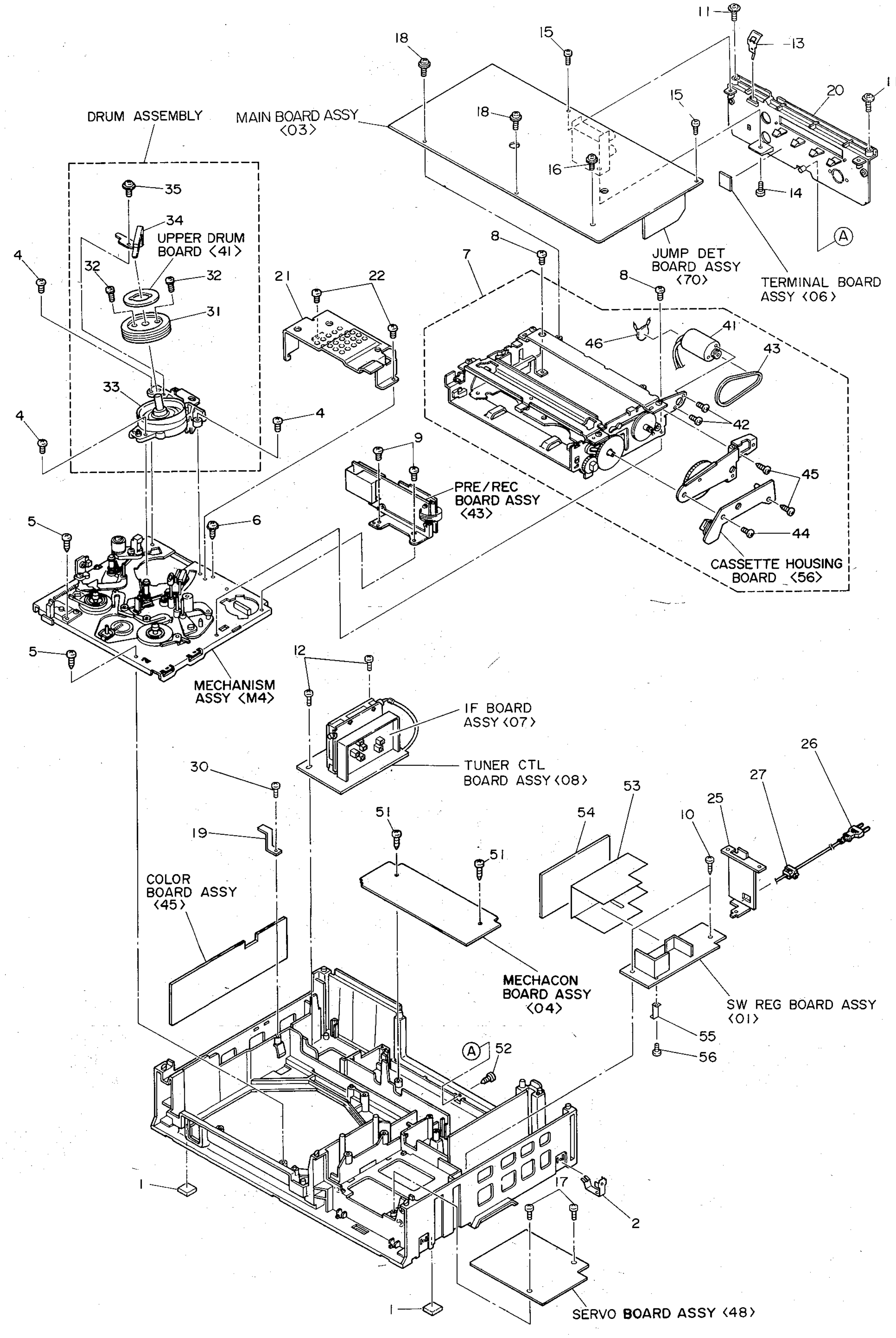

4.4 MECHANISM ASSEMBLY <M4>

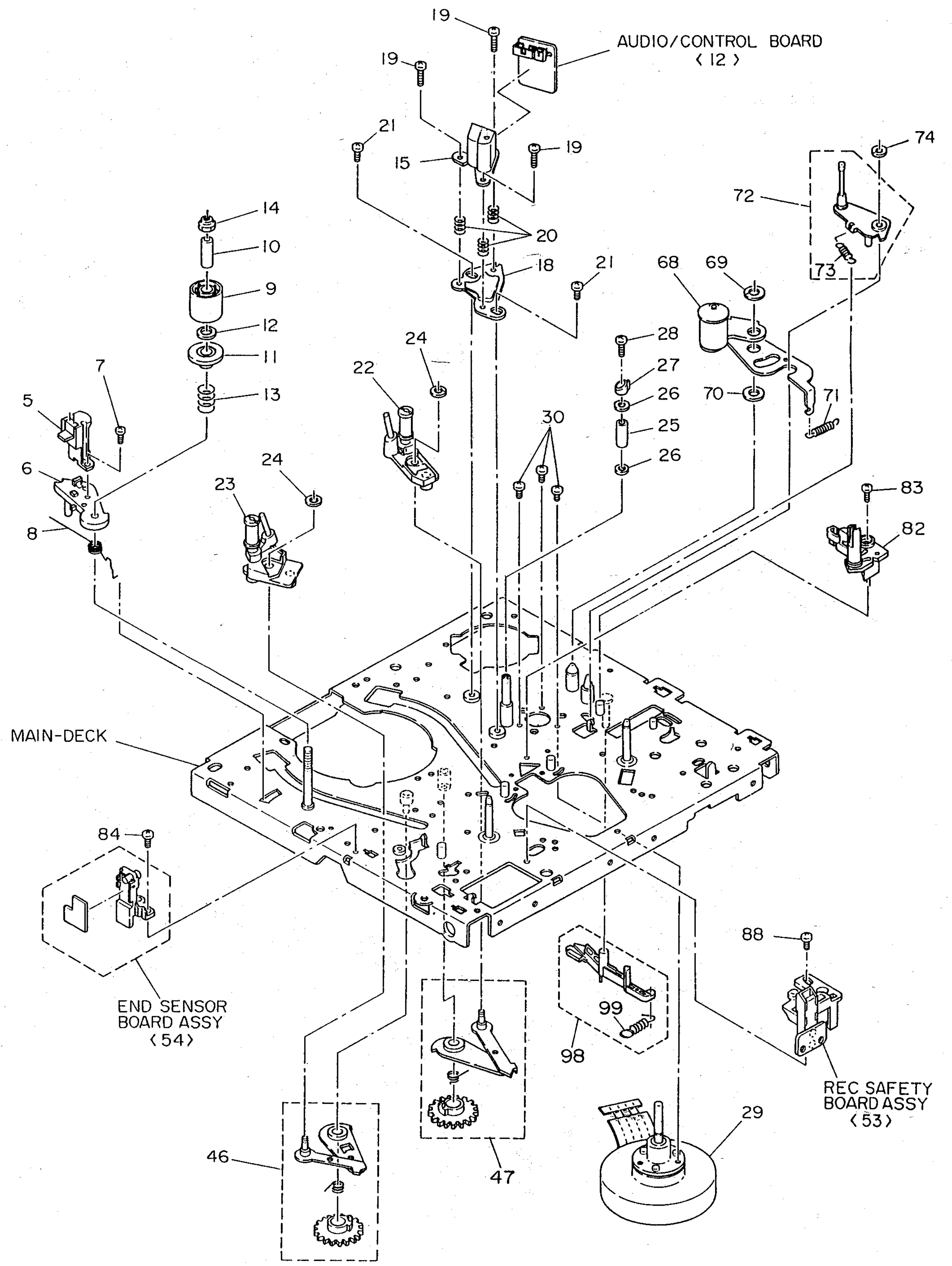

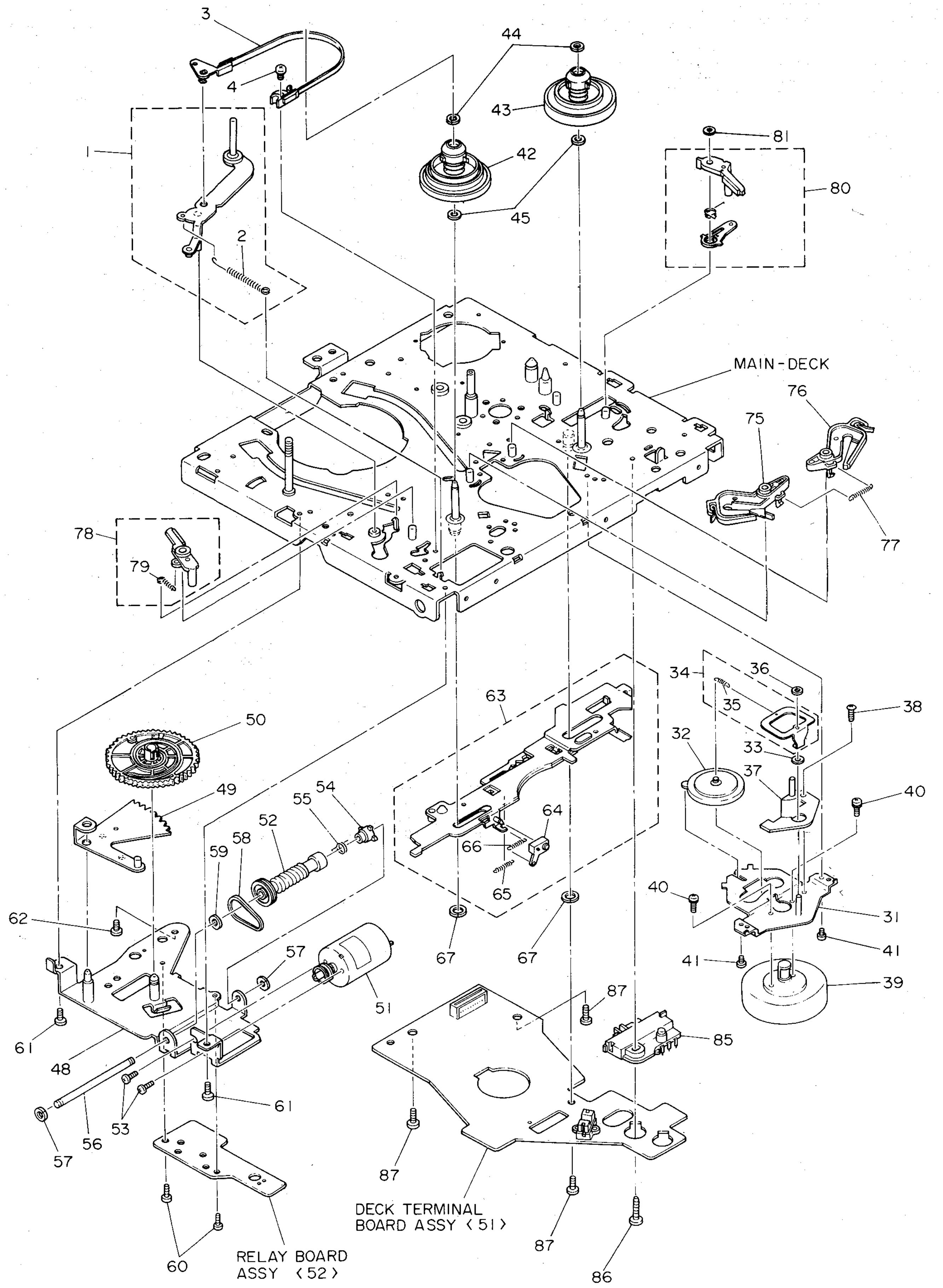

****

****
*   MECHANISM ASSEMBLY <M4>   *
****

#⚠	REF NO.	PART NO.	PART NAME, DESCRIPTION
	1	PQ41944A-7	TENSION ARM ASSY,INCL.2
	2	PQ41952-3	SPRING
	3	PQ41948A	TENSION BAND ASSY
	4	SDST2606Z	TAPPING SCREW
	5	PU57641-2	FULL ERASE HEAD
	6	PQ31036	FULL ERASE HEAD BASE
	7	SPSG2606Z	TAPPING SCREW
	8	PQ41954-1-1	TORSION SPRING
	9	PQ41955	IMPEDANCE ROLLER
	10	PQ41956	COLLAR
	11	PQ41957	LOWER FLANGE
		OR PQ42958	LOWER FLANGE
	12	PQM30018-39	SPACER
		OR PQM30018-50	SPACER
	13	PQM30002-124	COMPRESSION SPRING
	14	PQ40353	NYLON NUT
	15	PU60560	AUDIO/CONTROL HEAD
	18	PQ42984-2	HEAD BASE
	19	SPSP2608Z	SCREW,X3
	20	PU30080-49	SPRING,X3
	21	SDSP2606Z	SCREW,X2
	22	PQ41963A-2	POLE BASE ASSY(TAKE-UP)
		OR PU59994	POLE BASE ASSY(TAKE-UP)
	23	PQ41969A-2	POLE BASE ASSY(SUP)
		OR PU59993	POLE BASE ASSY(SUPPLY)
	24	PQM30017-5	SLIT WASHER,X2
	25	PU53629-2	TAPE GUIDE
	26	PQ40268-2	GUIDE FLANGE,X2
	27	PQ42999-2-1	GUIDE POLE CAP
	28	SDSP2006Z	SCREW
⚠	29	PU60201V	CAPSTAN MOTOR
	30	SPSP2605N	SCREW,X3
	31	PQ41974A-3	REEL MOTOR BRACKET ASSY
	32	PU58645-1-4	IDLER ARM
	33	Q03093-834	WASHER
	34	PQ41976A-1	SPRING ARM ASSY,INCL.35
	35	PQ42212-1-4	SPRING
	36	PQM30017-22	SLIT WASHER
	37	PQ41978	HOLDER
	38	SPST2606Z	TAPPING SCREW
⚠	39	PU58636W	REEL MOTOR
⚠		OR PU58636M	REEL MOTOR
	40	LPSP2604Z	SCREW,X2
	41	SPST2606Z	TAPPING SCREW,X2
	42	PU59250-1-2	REEL DISK(SUP)
	43	PU58638-1-2	REEL DISK(TU)
	44	PQM30017-5	SLIT WASHER,X2
	45	Q03093-828	WASHER,X2
	46	PQ41979A-5	LOADING ARM ASSY(SUP)
	47	PQ41985B-3	LOADING ARM ASSY(TU)
	48	PQ41992A-2	CAM BRACKET SUB ASSY
	49	PQ41994A-3	ARM GEAR ASSY
	50	PQ20577-2	CONTROL CAM
⚠	51	PQ41996B	MODE MOTOR ASSY
	52	PQ41998A	WORM ASSY
	53	LPSP2604Z	SCREW,X2
	54	PQ42001	WINDMILL
	55	PQ42002	CLUTCH SPRING
	56	PQ42003	WORM SHAFT
	57	PQM30017-5	SLIT WASHER,X2
	58	PQM30003-20	BELT
	59	PQM30018-22	SPACER
	60	SPST2606Z	TAPPING SCREW,X2
	61	SPST2606Z	TAPPING SCREW,X2
	62	SPSP2603Z	SCREW
	63	PQ42038D	PLATE ASSY,INCL.64-66
	64	PQ31044-1-2	LOCK LEVER
	65	PQM30001-191	TENSION SPRING
	66	PQM30001-211	TENSION SPRING
	67	PQM30017-28	SLIT WASHER,X2
	68	PQ42006B	PINCH ROLLER ARM ASSY
	69	PQM30017-28	SLIT WASHER
	70	Q03093-833	WASHER
	71	PQM30001-229	TENSION SPRING
	72	PQ42013B-4	GUIDE ARM ASSY,INCL.73
	73	PQ42029	SPRING
	74	PQM30017-6	SLIT WASHER
	75	PQ42019A-6	MAIN BRAKE ASSY(SUP)
	76	PQ42020B	MAIN BRAKE ASSY(TU)
	77	PQM30001-216	TENSION SPRING
	78	PQ42021A-3	SUB BRAKE ASSY(SUP),INCL.79
	79	PQ42023-1-2	TENSION SPRING
	80	PQ42037A-2	SUB BRAKE ASSY(TU)
	81	PQM30017-6	SLIT WASHER
	82	PU59925-1-1	LED HOLDER,INCL.LED
	83	SPST2606Z	TAPPING SCREW
	84	SPST2606Z	TAPPING SCREW
	85	PU60444	SLIDE ENCODER
	86	SDSP2610Z	SCREW
	87	SDSP2606Z	SCREW,X3
	88	SDST2606Z	TAPPING SCREW
	98	PQ43295A-1	MOTOR BRAKE ASSY,INCL.99
	99	PQ43296	SPRING

SECTION 5
PARTS LIST

****

SW.REGULATOR BOARD ASSEMBLY <01>

#⚠	REF NO.	PART NO.	PART NAME, DESCRIPTION
	PWBA	PB20221A-02	SW.REG BOARD ASSY
	IC1	STR-D1706-F	IC
	IC2	STK5474	IC
	Q1	DTD114ES	TRANSISTOR
	Q11	2SD1406Y	TRANSISTOR
	Q12	DTC144WS	TRANSISTOR
	OR	UN4212	TRANSISTOR
	D1	S1WB(A)60	DIODE
	D2	RU1A	FR DIODE
	D3	RU1A	FR DIODE
	D4	AU01Z	FR DIODE
	D5	AU01Z	FR DIODE
	D6	AU01Z	FR DIODE
	D7	AU01Z	FR DIODE
	D8	AU01Z	FR DIODE
	D9	AU01Z	FR DIODE
	D31	F6P20F	FR DIODE
	OR	FML-12S	FR DIODE
	D32	21DQ04	BARRIER DIODE
	OR	RK14LF-B2	BARRIER DIODE
	D34	AU01Z	FR DIODE
	D35	AU01Z	FR DIODE
	D36	MA165	DIODE
	OR	1SS133	DIODE
	D37	RD4.7ES-T1B3	ZENER DIODE
	D38	AU01Z	FR DIODE
	D39	RD6.2ES-T1B2	ZENER DIODE
	D40	MA165	DIODE
	OR	1SS133	DIODE
	D41	RD10ES-T1B2	ZENER DIODE
	R1	QRZ0078-2R2	W.W.RESISTOR
	R2	QRD121J-154S	RESISTOR
	R3	QRD121J-154S	RESISTOR
	R4	QRG029J-683	OMF RESISTOR
	R5	QRG019J-390	OMF RESISTOR
	R6	QRG019J-331	OMF RESISTOR
	R9	QRZ0078-R39	WW RESISTOR
	R11	QRD161J-333	RESISTOR
⚠	R31	PU60466-R023	FUSIBLE RESISTOR
⚠	R32	PU60466-R037	FUSIBLE RESISTOR
⚠	R33	QRZ0077-220X	FUSIBLE RESISTOR
⚠	R34	QRZ0077-220X	FUSIBLE RESISTOR
	R35	QRZ0077-4R7X	FUSIBLE RESISTOR
	R36	QRD161J-102	RESISTOR
	R38	QRD161J-822	RESISTOR
	R39	QRD161J-682	RESISTOR
	R40	QRD161J-272	RESISTOR
	R41	QRD161J-223	RESISTOR
	R42	QRD161J-333	RESISTOR
⚠	C1	QFZ9022-473	MM CAPACITOR
⚠	C2	QFZ9022-223	MM CAPACITOR
⚠	C3	QCZ9016-102K	CAPACITOR
⚠	C6	QCZ9016-102K	CAPACITOR
⚠	C7	QCZ9016-102K	CAPACITOR
⚠	C8	QCZ9016-102K	CAPACITOR
	C10	QEZ0111-107	E CAPACITOR
	C11	QCY53AK-472	CAPACITOR
	C12	QCY43AK-331	CAPACITOR
	C13	QFV41HJ-333	M CAPACITOR
	C14	QEZ0107-106Z	E CAPACITOR
	C15	QFV41HJ-223	M CAPACITOR
	C16	QFL41HJ-222	M CAPACITOR
	C17	QFV41HJ-124	M CAPACITOR
	C18	QEZ0108-187Z	E CAPACITOR
⚠	C21	QCZ9016-102K	CAPACITOR
⚠	C22	QCZ9016-102K	CAPACITOR
	C23	QED61HM-105	E CAPACITOR
	C31	QEZ0125-228	E CAPACITOR
	C32	QEZ0106-228	E CAPACITOR
	C33	QEZ0104-476Z	E CAPACITOR
	C34	QEZ0107-476Z	E CAPACITOR
	C35	QETB1EM-108	E CAPACITOR
	C36	QETB1AM-108	E CAPACITOR
	C38	QFL41HJ-102	M CAPACITOR
	C39	QFL41HJ-102	M CAPACITOR
	C40	QETC1HM-106	E CAPACITOR
	C41	QETC1AM-107	E CAPACITOR
	C42	QETC1CM-107	E CAPACITOR
	C43	QETC1CM-107	E CAPACITOR
	C45	QETC1HM-226	E CAPACITOR
	C46	QETC1JM-226	E CAPACITOR
	L31	PU56183-330	CHOKE COIL
	L32	PU56183-330	CHOKE COIL
	L33	PU48530-101K	PEAKING COIL
	L34	PU48530-101K	PEAKING COIL
	L35	PU48530-100K	CHOKE COIL
	L36	PU48530-100K	CHOKE COIL
⚠	T1	PU60667	SW.TRANS
⚠	HD1	PU57505	FUSE CLIP
⚠	LF1	PU60347	LINE FILTER
⚠	CP1	ICP-F20	CIRCUIT PROTECTOR
⚠	F1	QMF51E2-1R0	FUSE

****

MAIN BOARD ASSEMBLY <03>

#⚠	REF NO.	PART NO.	PART NAME, DESCRIPTION
	PWBA	PB10123A-01	MAIN BOARD ASSY
⚠	RF1	PU60499	RF CONV & MIXER
	R901	QVZ3521-334	V RESISTOR,V LOCK
	SLD1	PU60501	SHIELD CASE(1)
	SLD2	PU60502	SHIELD CASE(2)
	SLD3	PU60503	SHIELD CASE(3)
	TB1	PU60415A	CONNECTOR BOARD
		-AUDIO SECTION-	
	IC1	LA7295	IC
	Q1	2SC1740S(RS)	TRANSISTOR
	Q2	2SC1740S(RS)	TRANSISTOR

#⚠	REF NO.	PART NO.	PART NAME, DESCRIPTION
	Q3	2SC1740S(RS)	TRANSISTOR
	Q4	DTA124ES	TRANSISTOR
	Q5	DTA114ES	TRANSISTOR
	Q6	DTA124ES	TRANSISTOR
	Q7	DTA124ES	TRANSISTOR
	Q8	DTC124ES	TRANSISTOR
	Q9	DTA124ES	TRANSISTOR
	Q10	DTC124ES	TRANSISTOR
	Q11	DTC124ES	TRANSISTOR
	Q12	2SC1740S(QRS)	TRANSISTOR
	D1	1SS133	DIODE
	OR	MA165	DIODE
	D2	1SS133	DIODE
	OR	MA165	DIODE
	D3	1SS133	DIODE
	OR	MA165	DIODE
	D4	1SS133	DIODE
	OR	MA165	DIODE
	D6	1SS133	DIODE
	OR	MA165	DIODE
	R1	QRD161J-222	RESISTOR
	R2	QRD161J-223	RESISTOR
	R3	QRD161J-222	RESISTOR
	R4	QRD161J-473	RESISTOR
	R5	QRD161J-332	RESISTOR
	R6	QRD161J-682	RESISTOR
	R7	QRD161J-332	RESISTOR
	R8	QRD161J-100	RESISTOR
	R9	QRD161J-122	RESISTOR
	R10	QRD161J-122	RESISTOR
	R11	QRD161J-102	RESISTOR
	R12	QRD161J-153	RESISTOR
	R13	QRD161J-123	RESISTOR
	R14	QRD161J-223	RESISTOR
	R15	QRD161J-223	RESISTOR
	R16	QRD161J-223	RESISTOR
	R17	QRD161J-103	RESISTOR
	R18	QRD161J-223	RESISTOR
	R19	QRD161J-183	RESISTOR
	R20	QRD161J-104	RESISTOR
	R21	QRD161J-104	RESISTOR
	R22	QRD161J-183	RESISTOR
	R23	QRD161J-223	RESISTOR
	R24	QRD161J-333	RESISTOR
	R25	QRD161J-151	RESISTOR
	R26	QRD161J-122	RESISTOR
	R27	QRD161J-153	RESISTOR
	R28	QRD161J-392	RESISTOR
	R29	QRD161J-391	RESISTOR
	R30	QRD161J-151	RESISTOR
	R31	QRD161J-8R2	RESISTOR
	R33	QRD161J-561	RESISTOR
	R34	QRD161J-223	RESISTOR
	R35	QRD161J-331	RESISTOR
	R36	QRD161J-334	RESISTOR
	R37	QRD161J-103	RESISTOR
	R39	QRD161J-395	RESISTOR
	R40	QRD161J-822	RESISTOR
	R41	QRD161J-273	RESISTOR
	R42	QVZ3523-473AZ	V RESISTOR
	OR	QVZ3518-473AZ	V RESISTOR
	R43	QRD161J-153	RESISTOR
	R44	QRD161J-6R8	RESISTOR
	R45	QRD161J-395	RESISTOR
	R48	QRD161J-475	RESISTOR
	C1	QCVB1CM-103	CAPACITOR

#⚠	REF NO.	PART NO.	PART NAME, DESCRIPTION
	C2	QETC1HM-105	E CAPACITOR
	C3	QETC1CM-476	E CAPACITOR
	C4	QETC1CM-476	E CAPACITOR
	C5	QETC1HM-105	E CAPACITOR
	C6	QFV71HJ-273	M CAPACITOR
	C7	QFV71HJ-123	M CAPACITOR
	C8	QFV71HJ-473	M CAPACITOR
	C9	QFV71HJ-563	M CAPACITOR
	C10	QEK61EM-335	E CAPACITOR
	C11	QFV71HJ-223	M CAPACITOR
	C12	QFL31HJ-122	M CAPACITOR
	C13	QFL31HJ-222	M CAPACITOR
	C14	QETC1HM-334	E CAPACITOR
	C15	PU60550	E CAPACITOR
	C16	QETB1CM-336	E CAPACITOR
	C17	QFV71HJ-103	M CAPACITOR
	C18	QETC1HM-105	E CAPACITOR
	C20	QFL31HJ-272	M CAPACITOR
	C21	QEK61CM-106	E CAPACITOR
	C23	QCBB1HJ-331	CAPACITOR
	C24	QFV71HJ-473	M CAPACITOR
	C25	QETC1CM-106	E CAPACITOR
	C26	QCXB1CM-272	CAPACITOR
	C27	QFL31HJ-392	M CAPACITOR
	C28	QCVB1CM-103	CAPACITOR
	C29	QCVB1CM-103	CAPACITOR
	C30	QCVB1CM-103	CAPACITOR
	C31	QCVB1CM-103	CAPACITOR
	L1	PU58308-682J	PEAKING COIL
	L2	PU58308-103J	PEAKING COIL
	T1	PU60510-2	OSC TRANSFORMER

-LUMINANCE SECTION-

#⚠	REF NO.	PART NO.	PART NAME, DESCRIPTION
	IC101	PB20166F	Y MOD.
⚠	IC102	MSM6967RS	IC
⚠	IC202	MSM6989RS	IC
	IC203	NJM2234S	IC
⚠	IC501	MSM6966RS	IC
	IC502	BA7021	IC
	IC503	NJM2233AS	IC
	Q101	2SC1740S(QRS)	TRANSISTOR
	Q103	2SA1309R,S	TRANSISTOR
	OR	2SA933S(RS)	TRANSISTOR
	Q104	2SC1740S(QRS)	TRANSISTOR
	Q107	2SA1309R,S	TRANSISTOR
	OR	2SA933S(RS)	TRANSISTOR
	Q110	DTC124ES	TRANSISTOR
	Q111	DTC124ES	TRANSISTOR
	Q201	DTC124ES	TRANSISTOR
	Q209	2SC1740S(QRS)	TRANSISTOR
	Q210	2SC1740S(QRS)	TRANSISTOR
	Q211	2SA1309R,S	TRANSISTOR
	OR	2SA933S(RS)	TRANSISTOR
	Q212	2SC1740S(QRS)	TRANSISTOR
	Q213	2SC1740S(QRS)	TRANSISTOR
	Q251	2SC1740S(QRS)	TRANSISTOR
	Q252	2SC1740S(QRS)	TRANSISTOR
	Q253	2SA1309R,S	TRANSISTOR
	OR	2SA933S(RS)	TRANSISTOR
	Q254	DTC144ES	TRANSISTOR
	Q256	2SC1740S(QRS)	TRANSISTOR
	Q257	DTA124ES	TRANSISTOR

#⚠	REF NO.	PART NO.	PART NAME, DESCRIPTION
	Q258	DTC144ES	TRANSISTOR
	Q259	2SC1740S(QRS)	TRANSISTOR
	Q260	2SA1309R,S	TRANSISTOR
		OR 2SA933S(RS)	TRANSISTOR
	Q503	DTC124ES	TRANSISTOR
	Q504	DTC124ES	TRANSISTOR
	Q505	2SC1740S(RS)	TRANSISTOR
	Q506	2SA1309R,S	TRANSISTOR
		OR 2SA933S(RS)	TRANSISTOR
	Q507	DTA124ES	TRANSISTOR
	Q508	2SA1309R,S	TRANSISTOR
		OR 2SA933S(RS)	TRANSISTOR
	Q509	DTC124ES	TRANSISTOR
	Q510	DTC124ES	TRANSISTOR
	Q511	DTC124ES	TRANSISTOR
	Q512	DTC124ES	TRANSISTOR
	Q513	2SA1309R,S	TRANSISTOR
		OR 2SA933S(RS)	TRANSISTOR
	Q514	2SC1740S(RS)	TRANSISTOR
	Q515	2SC1740S(RS)	TRANSISTOR
	Q516	2SC1740S(RS)	TRANSISTOR
	Q517	DTC144ES	TRANSISTOR
	D101	MA165	DIODE
		OR 1SS133	DIODE
	D102	MA165	DIODE
		OR 1SS133	DIODE
	D103	MA165	DIODE
		OR 1SS133	DIODE
	D104	RD9.1ES-T1B2	ZENER DIODE
	D105	MA165	DIODE
		OR 1SS133	DIODE
	D203	RD9.1ES-T1B2	ZENER DIODE
	D204	MA165	DIODE
		OR 1SS133	DIODE
	D206	MA165	DIODE
		OR 1SS133	DIODE
	D207	MA165	DIODE
		OR 1SS133	DIODE
	D251	MA165	DIODE
		OR 1SS133	DIODE
	D254	MA165	DIODE
		OR 1SS133	DIODE
	D255	1SS292	DIODE
	D257	1SS133	DIODE
		OR MA165	DIODE
	D502	1SS133	DIODE
		OR MA165	DIODE
	D504	RD9.1ES-T1B2	ZENER DIODE
	D505	1SS133	DIODE
		OR MA165	DIODE
	D506	1SS133	DIODE
		OR MA165	DIODE
	D507	1SS133	DIODE
		OR MA165	DIODE
	D508	1SS133	DIODE
		OR MA165	DIODE
	D509	1SS133	DIODE
		OR MA165	DIODE
	D512	1SS133	DIODE
		OR MA165	DIODE
	D513	1SS133	DIODE
		OR MA165	DIODE
	R101	QRD161J-103	RESISTOR
	R102	QRD161J-182	RESISTOR
	R103	QRD161J-333	RESISTOR
	R104	QRD161J-333	RESISTOR
	R105	QRD161J-331	RESISTOR
	R108	QRD161J-681	RESISTOR
	R109	QRD161J-331	RESISTOR
	R111	QRD161J-102	RESISTOR
	R112	QVZ3518-222	V RESISTOR
	R113	QRD161J-222	RESISTOR
	R114	QRD161J-102	RESISTOR
⚠	R115	QRD161J-181	RESISTOR
	R117	QRD161J-102	RESISTOR
	R119	QRD122J-391	RESISTOR
	R120	QRD161J-333	RESISTOR
	R122	QRD161J-183	RESISTOR
	R124	QRD161J-101	RESISTOR
	R147	QRD161J-562	RESISTOR
	R150	QRD161J-222	RESISTOR
	R152	QRD161J-101	RESISTOR
	R153	QRD161J-332	RESISTOR
	R155	QRD161J-681	RESISTOR
	R160	QRD161J-221	RESISTOR
	R201	QRD161J-181	RESISTOR
	R202	QRD161J-471	RESISTOR
	R203	QRD161J-181	RESISTOR
	R204	QVZ3518-681	V RESISTOR
⚠	R217	QRD161J-181	RESISTOR
	R219	QRD161J-222	RESISTOR
	R220	QRD161J-393	RESISTOR
	R221	QRD161J-473	RESISTOR
	R222	QRD161J-332	RESISTOR
	R223	QVZ3518-682	V RESISTOR
	R224	QRD161J-102	RESISTOR
	R225	QRD161J-122	RESISTOR
	R226	QRD161J-153	RESISTOR
	R227	QRD161J-223	RESISTOR
	R228	QRD161J-561	RESISTOR
	R229	QRD161J-681	RESISTOR
	R230	QRD161J-681	RESISTOR
	R231	QRD161J-681	RESISTOR
	R232	QRD161J-471	RESISTOR
	R233	QRD161J-222	RESISTOR
	R238	QRD161J-123	RESISTOR
	R245	QRD161J-183	RESISTOR
	R246	QRD161J-153	RESISTOR
	R251	QRD161J-222	RESISTOR
	R252	QRD161J-222	RESISTOR
	R253	QRD161J-152	RESISTOR
	R254	QRD161J-681	RESISTOR
	R255	QRD161J-222	RESISTOR
	R260	QRD161J-103	RESISTOR
	R261	QRD161J-394	RESISTOR
	R264	QRD161J-104	RESISTOR
	R265	QRD161J-103	RESISTOR
	R266	QRD161J-562	RESISTOR
	R267	QRD161J-182	RESISTOR
	R268	QRD161J-682	RESISTOR
	R269	QRD161J-104	RESISTOR
	R270	QRD161J-182	RESISTOR
	R271	QRD161J-562	RESISTOR
	R275	QRD161J-103	RESISTOR
	R505	QRD161J-472	RESISTOR
	R506	QRD161J-333	RESISTOR
	R507	QRD161J-103	RESISTOR

#⚠	REF NO.	PART NO.	PART NAME, DESCRIPTION
	R508	QRD161J-102	RESISTOR
	R509	QVZ3518-222	V RESISTOR
	R510	QRD161J-182	RESISTOR
	R511	QRD161J-102	RESISTOR
	R512	QRD161J-392	RESISTOR
⚠	R513	QRD161J-181	RESISTOR
	R514	QRD161J-562	RESISTOR
	R515	QVZ3518-222	V RESISTOR
	R516	QRD161J-222	RESISTOR
	R517	QVZ3518-222	V RESISTOR
	R518	QRD161J-821	RESISTOR
	R519	QRD161J-222	RESISTOR
	R520	QRD161J-750	RESISTOR
	R521	QRD161J-472	RESISTOR
	R522	QRD161J-563	RESISTOR
	R523	QRD161J-104	RESISTOR
	R524	QRD161J-272	RESISTOR
	R525	QRD161J-272	RESISTOR
	R526	QRD161J-563	RESISTOR
	R527	QRD161J-104	RESISTOR
	R528	QRD161J-472	RESISTOR
	R531	QRD161J-102	RESISTOR
	R532	QRD161J-102	RESISTOR
	R533	QRD161J-102	RESISTOR
	R534	QRD161J-103	RESISTOR
	R535	QRD161J-272	RESISTOR
	R536	QRD161J-123	RESISTOR
	R537	QRD161J-103	RESISTOR
	R538	QRD161J-103	RESISTOR
	R539	QRD161J-103	RESISTOR
	R540	QRD161J-682	RESISTOR
	R541	QRD161J-103	RESISTOR
	R542	QRD161J-750	RESISTOR
	R543	QRD161J-103	RESISTOR
	R544	QRD161J-103	RESISTOR
	B	QRD161J-0R0	RESISTOR
	C101	QCSB1HJ-220	CAPACITOR
	C102	QETC1AM-226	E CAPACITOR
	C103	QETC1EM-335	E CAPACITOR
	C104	QCVB1CN-103	CAPACITOR
	C105	QCBB1HJ-121	CAPACITOR
	C106	QCBB1HJ-121	CAPACITOR
	C107	QCSB1HJ-220	CAPACITOR
	C108	QETC1AM-226	E CAPACITOR
	C109	QETC1EM-475	E CAPACITOR
	C110	QCSB1HJ-120	CAPACITOR
	C111	QETC1HM-104	E CAPACITOR
	C112	QETC1EM-475	E CAPACITOR
	C113	QCVB1CN-103	CAPACITOR
	C114	QCVB1CN-103	CAPACITOR
	C115	QCVB1CN-103	CAPACITOR
	C116	QETC0JM-476	E CAPACITOR
	C117	QETC1AM-476	E CAPACITOR
	C118	QCVB1CN-103	CAPACITOR
	C119	QCVB1CN-103	CAPACITOR
	C120	QCVB1CN-103	CAPACITOR
	C121	QETC1CM-106	E CAPACITOR
	C122	QETC1HM-224	E CAPACITOR
	C123	QETC1EM-335	E CAPACITOR
	C124	QETC0JM-337	E CAPACITOR
	C125	QEN61EM-335	NP E CAPACITOR
	C126	QCVB1CN-103	CAPACITOR
	C127	QCVB1CN-103	CAPACITOR
	C128	QCSB1HJ-470	CAPACITOR
	C129	QETC0JM-476	E CAPACITOR
	C130	QCVB1CN-103	CAPACITOR

#⚠	REF NO.	PART NO.	PART NAME, DESCRIPTION
	C131	QCVB1CN-103	CAPACITOR
	C132	QETA0JM-476	E CAPACITOR
	C133	QCVB1CN-103	CAPACITOR
	C134	QETC1CM-476	E CAPACITOR
	C149	QEN41AM-226	NP E CAPACITOR
	C152	QCSB1HJ-120	CAPACITOR
	C155	QCVB1CN-103	CAPACITOR
	C201	QCSB1HJ-180	CAPACITOR
	C213	QCVB1CN-103	CAPACITOR
	C221	QETC1AM-107	E CAPACITOR
	C222	QCVB1CN-103	CAPACITOR
	C224	QETC1HM-104	E CAPACITOR
	C225	QETC1EM-475	E CAPACITOR
	C226	QCVB1CN-103	CAPACITOR
	C227	QCVB1CN-103	CAPACITOR
	C229	QETC0JM-476	E CAPACITOR
	C230	QCVB1CN-103	CAPACITOR
	C233	QEK61CM-106	E CAPACITOR
	C234	QETC1CM-476	E CAPACITOR
	C235	QCVB1CN-103	CAPACITOR
	C236	QCSB1HJ-330	CAPACITOR
	C237	QCSB1HJ-270	CAPACITOR
	C238	QETC1AM-476	E CAPACITOR
	C239	QCSB1HJ-200	CAPACITOR
	C244	QCVB1CN-103	CAPACITOR
	C245	QCVB1CN-103	CAPACITOR
	C246	QETC1CM-106	E CAPACITOR
	C247	QETC1CM-106	E CAPACITOR
	C251	QCVB1CN-103	CAPACITOR
	C252	QCVC1CN-103	CAPACITOR
	C253	QCVB1CN-103	CAPACITOR
	C255	QCVB1CN-103	CAPACITOR
	C256	QCC11EJ-104	CAPACITOR
	C257	QCVB1CN-103	CAPACITOR
	C258	QEN50JM-336	NP E CAPACITOR
	C260	QCVB1CN-103	CAPACITOR
	C261	QCVB1CN-103	CAPACITOR
	C501	QCSB1HJ-150	CAPACITOR
	C502	QCBB1HJ-151	CAPACITOR
	C503	QCSB1HJ-100	CAPACITOR
	C504	QCSB1HJ-130	CAPACITOR
	C505	QETB1EM-475	E CAPACITOR
	C506	QCSB1HJ-330	CAPACITOR
	C517	QETC1EM-475	E CAPACITOR
	C518	QETC1HM-104	E CAPACITOR
	C519	QCVB1CN-103	CAPACITOR
	C520	QCVB1CN-103	CAPACITOR
	C521	QCVB1CN-103	CAPACITOR
	C522	QETC0JM-476	E CAPACITOR
	C523	QCVB1CN-103	CAPACITOR
	C524	QETC1AM-476	E CAPACITOR
	C525	QCVB1CN-103	CAPACITOR
	C526	QCVB1CN-103	CAPACITOR
	C527	QCVB1CN-103	CAPACITOR
	C528	QETC1AM-476	E CAPACITOR
	C529	QETC1HM-225	E CAPACITOR
	C530	QETC1AM-226	E CAPACITOR
	C532	QETC0JM-477	E CAPACITOR
	C533	QFN31HJ-123	M CAPACITOR
	C534	QFN31HJ-123	M CAPACITOR

#⚠	REF NO.	PART NO.	PART NAME, DESCRIPTION
	C535	QETC1CM-106	E CAPACITOR
	C536	QETC0JM-476	E CAPACITOR
	C537	QCVB1CN-103	CAPACITOR
	C538	QCSB1HJ-390	CAPACITOR
	C539	QCBB1HJ-181	CAPACITOR
	C540	QCBB1HJ-181	CAPACITOR
	C541	QCBB1HJ-101	CAPACITOR
	C542	QCVB1CN-103	CAPACITOR
	C543	QETB0JM-476	E CAPACITOR
	C544	QCBB1HJ-101	CAPACITOR
	C545	QCBB1HJ-181	CAPACITOR
	C546	QCBB1HJ-181	CAPACITOR
	C547	QCSB1HJ-390	CAPACITOR
	C548	QCVB1CN-103	CAPACITOR
	C549	QETC0JM-476	E CAPACITOR
	C550	QETB0JM-107	E CAPACITOR
	L101	PU59152-121J	PEAKING COIL
	L102	PU59152-221J	PEAKING COIL
	L103	PU59152-680J	PEAKING COIL
	L104	PU59152-330J	PEAKING COIL
	L105	PU59152-101J	PEAKING COIL
	L106	PU48530-101K	PEAKING COIL
	L107	PU59152-101K	PEAKING COIL
	L108	PU59152-680J	PEAKING COIL
	L109	PU48530-101K	PEAKING COIL
	L110	PU59152-180J	PEAKING COIL
	L111	PU48530-101K	PEAKING COIL
	L112	PU48530-101K	PEAKING COIL
	L201	PU59152-680J	PEAKING COIL
	L202	PU59152-101K	PEAKING COIL
	L203	PU48530-101K	PEAKING COIL
	L204	PU59152-560J	PEAKING COIL
	L205	PU59152-390J	PEAKING COIL
	L206	PU48530-101K	PEAKING COIL
	L207	PU48530-101K	PEAKING COIL
	L208	PU48530-101K	PEAKING COIL
	L251	PU48530-101K	PEAKING COIL
	L501	PU59152-121J	PEAKING COIL
	L502	PU59152-680J	PEAKING COIL
	L504	PU59152-101K	PEAKING COIL
	L505	PU48530-101K	PEAKING COIL
	L506	PU48530-101K	PEAKING COIL
	L507	PU48530-101K	PEAKING COIL
	L508	PU48530-101K	PEAKING COIL
	L509	PU59152-820J	PEAKING COIL
	EQ101	PU60162	EQUALIZER
	EQ103	PU60282-2	EQUALIZER
	LPF101	PU60161	LOW PASS FILTER
	LPF102	PU59855	LOW PASS FILTER
	CN102	PU59555-10	CAP HOUSING
		-COLOR SECTION-	
⚠	IC301	PU22046A	C.MODULE BOARD ASSY
	IC351	BA7007	IC
	IC405	NJM2234S	IC
	IC601	NJM2234S	IC
	IC602	NJM2234S	IC
	IC603	NJM2233AS	IC
	IC751	M50255P	IC
	Q301	2SC1740S(QRS)	TRANSISTOR
	Q302	2SC1740S(QRS)	TRANSISTOR

#⚠	REF NO.	PART NO.	PART NAME, DESCRIPTION
	Q311	DTC124ES	TRANSISTOR
	Q312	DTC144ES	TRANSISTOR
	Q313	DTC144ES	TRANSISTOR
	Q314	DTC144ES	TRANSISTOR
	Q315	DTC144WS	TRANSISTOR
	Q316	DTC144ES	TRANSISTOR
	Q317	2SC1740S(QRS)	TRANSISTOR
	Q319	2SC1740S(QRS)	TRANSISTOR
	Q351	2SC1740S(QRS)	TRANSISTOR
	Q402	DTA124ES	TRANSISTOR
	Q403	2SC1740S(QRS)	TRANSISTOR
	Q404	2SC1740S(QRS)	TRANSISTOR
	Q405	2SC1740S(QRS)	TRANSISTOR
	Q411	2SC1740S(QRS)	TRANSISTOR
	Q415	DTC124ES	TRANSISTOR
	Q416	DTC124ES	TRANSISTOR
	Q417	DTC124ES	TRANSISTOR
	Q418	DTC124ES	TRANSISTOR
	Q419	DTC143ES	TRANSISTOR
	Q456	2SA1309R,S	TRANSISTOR
	OR	2SA933S(RS)	TRANSISTOR
	Q457	2SC1740S(QRS)	TRANSISTOR
	Q466	2SC1740S(QRS)	TRANSISTOR
	Q469	DTA124ES	TRANSISTOR
	Q601	2SA1309R,S	TRANSISTOR
	OR	2SA933S(RS)	TRANSISTOR
	Q602	DTC124ES	TRANSISTOR
	Q603	2SA1309R,S	TRANSISTOR
	OR	2SA933S(RS)	TRANSISTOR
	Q604	2SC1740S(RS)	TRANSISTOR
	Q605	2SC1740S(RS)	TRANSISTOR
	Q606	DTC124ES	TRANSISTOR
	Q607	2SC1740S(RS)	TRANSISTOR
	Q608	2SC1740S(RS)	TRANSISTOR
	Q612	2SC1740S(RS)	TRANSISTOR
	Q613	2SC1740S(RS)	TRANSISTOR
	Q614	2SC1740S(RS)	TRANSISTOR
	Q615	2SB643R,S	TRANSISTOR
	Q616	DTA144ES	TRANSISTOR
	Q617	DTC144WS	TRANSISTOR
	Q618	2SB643R,S	TRANSISTOR
	Q619	DTC124ES	TRANSISTOR
	Q620	DTA144ES	TRANSISTOR
	Q621	DTA144ES	TRANSISTOR
	Q622	DTC144ES	TRANSISTOR
	Q623	2SC1740S(RS)	TRANSISTOR
	Q624	DTA144ES	TRANSISTOR
	Q625	DTC144ES	TRANSISTOR
	D301	MA165	DIODE
	OR	1SS133	DIODE
	D302	MA165	DIODE
	OR	1SS133	DIODE
	D303	MA165	DIODE
	OR	1SS133	DIODE
	D351	MA165	DIODE
	OR	1SS133	DIODE
	D355	MA165	DIODE
	OR	1SS133	DIODE
	D356	MA165	DIODE
	OR	1SS133	DIODE
	D357	MA165	DIODE
	OR	1SS133	DIODE
	D358	MA165	DIODE

#⚠	REF NO.	PART NO.	PART NAME, DESCRIPTION
		OR 1SS133	DIODE
	D404	MA165	DIODE
		OR 1SS133	DIODE
	D405	MA165	DIODE
		OR 1SS133	DIODE
	D407	MA165	DIODE
		OR 1SS133	DIODE
	D408	MA165	DIODE
		OR 1SS133	DIODE
	D409	MA165	DIODE
		OR 1SS133	DIODE
	D410	MA165	DIODE
		OR 1SS133	DIODE
	D459	MA165	DIODE
		OR 1SS133	DIODE
	D601	1SS133	DIODE
		OR MA165	DIODE
	D602	1SS133	DIODE
		OR MA165	DIODE
	D603	1SS133	DIODE
		OR MA165	DIODE
	D604	1SS133	DIODE
		OR MA165	DIODE
	D605	1SS133	DIODE
		OR MA165	DIODE
	D606	1SS133	DIODE
		OR MA165	DIODE
	D607	1SS133	DIODE
		OR MA165	DIODE
	D608	1SS133	DIODE
		OR MA165	DIODE
	D609	1SS133	DIODE
		OR MA165	DIODE
	D610	1SS133	DIODE
		OR MA165	DIODE
	D615	1SS133	DIODE
		OR MA165	DIODE
	D618	1SS133	DIODE
		OR MA165	DIODE
	D621	1SS133	DIODE
		OR MA165	DIODE
	D622	1SS133	DIODE
		OR MA165	DIODE
	D623	1SS133	DIODE
		OR MA165	DIODE
	D624	1SS133	DIODE
		OR MA165	DIODE
	D625	1SS133	DIODE
		OR MA165	DIODE
	D626	1SS133	DIODE
		OR MA165	DIODE
	D627	1SS133	DIODE
		OR MA165	DIODE
	D628	1SS133	DIODE
		OR MA165	DIODE
	D629	1SS133	DIODE
		OR MA165	DIODE
	D630	1SS133	DIODE
		OR MA165	DIODE
	D631	1SS133	DIODE
		OR MA165	DIODE
	D632	1SS133	DIODE
		OR MA165	DIODE
	D633	1SS133	DIODE
		OR MA165	DIODE
	D634	1SS133	DIODE
		OR MA165	DIODE

#⚠	REF NO.	PART NO.	PART NAME, DESCRIPTION
	R301	QRD161J-102	RESISTOR
	R302	QRD161J-102	RESISTOR
	R303	QRD161J-473	RESISTOR
	R304	QRD161J-182	RESISTOR
	R305	QRD161J-681	RESISTOR
	R306	QRD161J-102	RESISTOR
	R307	QRD161J-102	RESISTOR
	R312	QRD161J-391	RESISTOR
	R313	QRD161J-561	RESISTOR
	R314	QRD161J-563	RESISTOR
	R316	QRD161J-221	RESISTOR
	R317	QRD161J-391	RESISTOR
	R318	QRD161J-122	RESISTOR
	R319	QRD161J-393	RESISTOR
	R320	QRD161J-103	RESISTOR
	R321	QRD161J-103	RESISTOR
	R322	QRD161J-361	RESISTOR
	R325	QRD161J-102	RESISTOR
	R326	QRD161J-472	RESISTOR
	R327	QRD161J-274	RESISTOR
	R328	QVZ3518-223	V RESISTOR
	R330	QRD161J-122	RESISTOR
	R331	QRD161J-222	RESISTOR
	R334	QRD161J-102	RESISTOR
	R335	QRD161J-122	RESISTOR
	R336	QRD161J-471	RESISTOR
	R337	QRD161J-152	RESISTOR
	R338	QRD161J-223	RESISTOR
	R339	QRD161J-682	RESISTOR
	R340	QRD161J-102	RESISTOR
	R341	QRD161J-181	RESISTOR
	R347	QRD161J-153	RESISTOR
	R348	QRD161J-103	RESISTOR
	R351	QRD161J-102	RESISTOR
	R352	QRD161J-154	RESISTOR
	R353	QRD161J-563	RESISTOR
	R354	QRD161J-182	RESISTOR
	R355	QVZ3518-472	V RESISTOR
	R356	QRD161J-103	RESISTOR
	R357	QRD161J-562	RESISTOR
	R358	QRD161J-333	RESISTOR
	R359	QRD161J-333	RESISTOR
	R360	QRD161J-102	RESISTOR
	R361	QRD161J-393	RESISTOR
	R364	QRD161J-223	RESISTOR
	R365	QRD161J-333	RESISTOR
	R420	QRD161J-562	RESISTOR
	R421	QRD161J-103	RESISTOR
	R422	QRD161J-153	RESISTOR
	R423	QRD161J-103	RESISTOR
	R424	QRD161J-682	RESISTOR
	R425	QRD161J-472	RESISTOR
	R426	QRD161J-562	RESISTOR
	R428	QRD161J-473	RESISTOR
	R430	QVZ3518-681	V RESISTOR
	R431	QRD161J-561	RESISTOR
	R432	QVZ3518-331	V RESISTOR
	R433	QRD161J-221	RESISTOR
	R434	QRD161J-473	RESISTOR
	R435	QRD161J-223	RESISTOR
	R436	QRD161J-102	RESISTOR
	R437	QRD161J-102	RESISTOR
	R438	QRD161J-820	RESISTOR
	R439	QRD161J-222	RESISTOR
	R440	QRD161J-183	RESISTOR

#⚠	REF NO.	PART NO.	PART NAME, DESCRIPTION
	R441	QRD161J-472	RESISTOR
	R442	QRD161J-153	RESISTOR
	R443	QRD161J-183	RESISTOR
	R444	QRD161J-333	RESISTOR
	R445	QRD161J-103	RESISTOR
	R451	QRD161J-102	RESISTOR
	R452	QVZ3518-681	V RESISTOR
	R459	QRD161J-392	RESISTOR
	R463	QRD161J-393	RESISTOR
	R477	QRD162J-153	RESISTOR
	R478	QRD161J-103	RESISTOR
	R479	QRD161J-222	RESISTOR
	R480	QRD161J-333	RESISTOR
	R481	QRD161J-333	RESISTOR
	R484	QRD161J-222	RESISTOR
	R486	QRD161J-562	RESISTOR
	R487	QRD161J-472	RESISTOR
	R601	QRD161J-393	RESISTOR
	R602	QRD161J-103	RESISTOR
	R605	QRD161J-103	RESISTOR
	R606	QRD161J-393	RESISTOR
	R607	QRD161J-103	RESISTOR
	R608	QRD161J-103	RESISTOR
	R609	QRD161J-103	RESISTOR
	R612	QRD161J-393	RESISTOR
	R613	QRD161J-682	RESISTOR
	R614	QRD161J-153	RESISTOR
	R615	QRD161J-393	RESISTOR
	R616	QRD161J-682	RESISTOR
	R617	QRD161J-222	RESISTOR
	R618	QRD161J-393	RESISTOR
	R619	QRD161J-182	RESISTOR
	R620	QRD161J-472	RESISTOR
	R621	QRD161J-103	RESISTOR
	R622	QRD161J-272	RESISTOR
	R623	QRD161J-393	RESISTOR
	R624	QRD161J-333	RESISTOR
	R626	QRD161J-391	RESISTOR
	R627	QRD161J-331	RESISTOR
	R628	QRD161J-271	RESISTOR
	R629	QRD161J-122	RESISTOR
	R630	QRD161J-562	RESISTOR
	R631	QRD161J-562	RESISTOR
	R632	QRD161J-222	RESISTOR
	R634	QRD161J-103	RESISTOR
	R635	QRD161J-153	RESISTOR
	R636	QRD161J-222	RESISTOR
	R637	QRD161J-153	RESISTOR
	R638	QRD161J-103	RESISTOR
	R639	QVZ3518-222	V RESISTOR
	R640	QVZ3518-222	V RESISTOR
	R641	QRD161J-103	RESISTOR
	R646	QRD161J-682	RESISTOR
	R647	QRD161J-682	RESISTOR
	R649	QRD161J-562	RESISTOR
	R650	QRD161J-153	RESISTOR
	R651	QRD161J-103	RESISTOR
	R652	QRD161J-222	RESISTOR
	R653	QRD161J-103	RESISTOR
	R654	QRD161J-153	RESISTOR
	R655	QVZ3518-681	V RESISTOR
	R656	QVZ3518-681	V RESISTOR
	R657	QRD161J-681	RESISTOR
	R658	QRD161J-821	RESISTOR

#⚠	REF NO.	PART NO.	PART NAME, DESCRIPTION
	R659	QRD161J-103	RESISTOR
	R660	QRD161J-332	RESISTOR
	R661	QRD161J-103	RESISTOR
	R662	QRD161J-103	RESISTOR
	R663	QRD161J-392	RESISTOR
	R664	QRD161J-473	RESISTOR
	R665	QRD161J-183	RESISTOR
	R666	QRD161J-122	RESISTOR
	R667	QRD161J-103	RESISTOR
	C302	QCBB1HJ-820	CAPACITOR
	C303	QCBB1HJ-102	CAPACITOR
	C304	QCVB1CN-103	CAPACITOR
	C305	QFN31HJ-473	M CAPACITOR
	C306	QCSB1HJ-470	CAPACITOR
	C311	QETC1CM-106	E CAPACITOR
	C312	QETB1HM-474	E CAPACITOR
	C313	QFN31HJ-563	M CAPACITOR
	C314	QETC1CM-106	E CAPACITOR
	C315	QETC1HM-225	E CAPACITOR
	C316	QETC1EM-335	E CAPACITOR
	C317	QFN31HJ-473	M CAPACITOR
	C318	QCVB1CN-103	CAPACITOR
	C319	QETC1EM-475	E CAPACITOR
	C320	QEM51AK-107	E CAPACITOR
	C321	QCVB1CN-103	CAPACITOR
	C322	QEK61HM-105	E CAPACITOR
	C323	QEK61HM-475	E CAPACITOR
	C324	QEK61HM-475	E CAPACITOR
	C326	QCVB1CN-103	CAPACITOR
	C327	QETC1HM-105	E CAPACITOR
	C328	QFN31HJ-223	M CAPACITOR
	C329	QCT25CH-220	CAPACITOR
	C330	QCVB1CN-103	CAPACITOR
	C331	QETC1CM-106	E CAPACITOR
	C332	QCBB1HJ-101	CAPACITOR
	C333	QCVB1CN-103	CAPACITOR
	C334	QCBB1HJ-102	CAPACITOR
	C335	QETC1AM-476	E CAPACITOR
	C336	QCVB1CN-103	CAPACITOR
	C337	QCSB1HK-5R6	CAPACITOR
	C340	QCC11EK-273	CAPACITOR
	OR	QCC11EK-273R	CAPACITOR
	C351	QETC1CM-476	E CAPACITOR
	C352	QCVB1CN-103	CAPACITOR
	C353	QETC1AM-336	E CAPACITOR
	C354	QFN31HJ-182	M CAPACITOR
	C355	QFN31HJ-272	M CAPACITOR
	C356	QFN31HJ-223	M CAPACITOR
	C357	QETC1CM-106	E CAPACITOR
	C358	QCVB1CN-103	CAPACITOR
	C422	QCVB1CN-103	CAPACITOR
	C423	QCVB1CN-103	CAPACITOR
	C424	QEK61AM-226	E CAPACITOR
	C426	QCVB1CN-103	CAPACITOR
	C431	QCVB1CN-103	CAPACITOR
	C432	QCVB1CN-103	CAPACITOR
	C433	QCVB1CN-103	CAPACITOR
	C434	QCVB1CN-103	CAPACITOR
	C435	QETC0JM-476	E CAPACITOR
	C436	QCVB1CN-103	CAPACITOR
	C439	QCVB1CN-103	CAPACITOR
	C453	QCVB1CN-103	CAPACITOR
	C454	QCVB1CN-103	CAPACITOR
	C455	QCVB1CN-103	CAPACITOR

#⚠	REF NO.	PART NO.	PART NAME, DESCRIPTION
	C461	QCVB1CN-103	CAPACITOR
	C601	QCVB1CN-103	CAPACITOR
	C602	QCVB1CN-103	CAPACITOR
	C603	QCVB1CN-103	CAPACITOR
	C604	QCVB1CN-103	CAPACITOR
	C605	QETC0JM-476	E CAPACITOR
	C606	QCVB1CN-103	CAPACITOR
	C607	QCVB1CN-103	CAPACITOR
	C608	QCVB1CN-103	CAPACITOR
	C609	QCVB1CN-103	CAPACITOR
	C610	QCVB1CN-103	CAPACITOR
	C611	QCVB1CN-103	CAPACITOR
	C612	QEK60JM-476	E CAPACITOR
	C613	QCVB1CN-103	CAPACITOR
	C614	QCVB1CN-103	CAPACITOR
	C615	QCVB1CN-103	CAPACITOR
	C616	QCVB1CN-103	CAPACITOR
	C617	QEK60JM-476	E CAPACITOR
	C628	QCVB1CN-103	CAPACITOR
	C629	QCVB1CN-103	CAPACITOR
	C633	QCVB1CN-103	CAPACITOR
	C634	QCVB1CN-103	CAPACITOR
	C635	QETC0JM-476	E CAPACITOR
	C638	QCVB1CN-103	CAPACITOR
	C639	QCVB1CN-103	CAPACITOR
	C640	QETC0JM-476	E CAPACITOR
	C751	QETC0JM-476	E CAPACITOR
	L302	PU48530-222J	PEAKING COIL
	L303	PU54223-271J	PEAKING COIL
	L311	PU47051-822	COIL
	L312	PU48530-101K	PEAKING COIL
	L313	PU59153-101K	INDUCTOR
	L314	PU59152-150J	PEAKING COIL
	L315	PU59152-820J	PEAKING COIL
	L316	PU48530-101K	PEAKING COIL
	L351	PU49057	LC BLOCK
	L352	PU48530-101K	PEAKING COIL
	L353	PU59153-562J	PEAKING COIL
	L403	PU48530-101K	PEAKING COIL
	L404	PU59152-150J	PEAKING COIL
	L405	PU59152-150J	PEAKING COIL
	L452	PU48530-101K	PEAKING COIL
	L601	PU48530-101K	PEAKING COIL
	L602	PU48530-101K	PEAKING COIL
	L603	PU48530-101K	PEAKING COIL
	L605	PU48530-101K	PEAKING COIL
	L751	PU48530-101K	PEAKING COIL
	EQ301	PU53501-5	EQUALIZER
	EQ501	PU54838	EQUALIZER
	LPF301	PU58022	LOW PASS FILTER
	LPF302	PU54988	LOW PASS FILTER
	OR	PU54988-2	LOW PASS FILTER
	LPF501	PU60055	LOW PASS FILTER
	BPF301	PU54410-2	BAND PASS FILTER
	BPF302	PU60371	BAND PASS FILTER
	CF351	PU56983	CERAMIC FILTER

#⚠	REF NO.	PART NO.	PART NAME, DESCRIPTION
	DL301	PU60340	COMB FILTER
	OR	PU60222	2H DELAY LINE
	OR	PU60490	COMB FILTER
	OR	PU58971-3	2H DELAY LINE
	DL401	PU54819	DELAY LINE
⚠	DL601	PU60496	DELAY LINE
⚠	XB301	PU58023	CRYSTAL BLOCK
⚠	X301	PU59335	CRYSTAL RESONATOR
⚠	OR	PU31449-4K	CRYSTAL RESONATOR
	X501	PU60294	CRYSTAL RESONATOR
	X502	PU60492	CRYSTAL RESONATOR
	CN303	PU59555-7	CAP HOUSING
	CN305	PU59555-7	CAP HOUSING

****

****

*   MECHACON BOARD ASSEMBLY <04>   *

****

REF NO.	PART NO.	PART NAME, DESCRIPTION
PWBA	PB20222A1-01	M-CTL BOARD ASSY
IC601	M50965-358SP	IC
OR	M50965E-334SP	IC
IC602	BA6259N	IC
IC603	M54647L	IC
IC604	BA6222	IC
Q601	2SC3311A(RS)	TRANSISTOR
D601	MA165	DIODE
OR	1SS133	DIODE
D602	MA165	DIODE
OR	1SS133	DIODE
D603	HZS4.3EB2	ZENER DIODE
D604	HZS7.5EB2	ZENER DIODE
D605	HZS7.5EB2	ZENER DIODE
D606	1SS133	DIODE
OR	MA165	DIODE
R601	QRD161J-152	RESISTOR
R602	QRD161J-103	RESISTOR
R603	QRD161J-103	RESISTOR
R604	QRD161J-122	RESISTOR
R605	QRD161J-823	RESISTOR
R606	QRD161J-102	RESISTOR
R607	QRD161J-102	RESISTOR
R608	QRD161J-102	RESISTOR
R609	QRD161J-472	RESISTOR
R610	QRD161J-103	RESISTOR
R611	QRD161J-105	RESISTOR
R612	QRD161J-103	RESISTOR
R613	QRD161J-103	RESISTOR
R614	QRD161J-472	RESISTOR
R615	QRD161J-472	RESISTOR
R616	QRD161J-472	RESISTOR
R617	QRD161J-472	RESISTOR
R618	QRD161J-472	RESISTOR
R619	QRD161J-472	RESISTOR
R620	QRD161J-472	RESISTOR
R621	QRD161J-472	RESISTOR
R622	QRD161J-472	RESISTOR
R623	QRD161J-472	RESISTOR
R624	QRD161J-472	RESISTOR

#⚠	REF NO.	PART NO.	PART NAME, DESCRIPTION
	R625	QRD161J-472	RESISTOR
	R626	QRD161J-472	RESISTOR
	R627	QRD161J-472	RESISTOR
	R628	QRD161J-124	RESISTOR
	R629	QRD161J-124	RESISTOR
	R630	QRD161J-333	RESISTOR
	R631	QRD161J-472	RESISTOR
	R632	QRD161J-332	RESISTOR
	R633	QRD161J-472	RESISTOR
	R634	QRD161J-103	RESISTOR
	R635	QRD161J-331	RESISTOR
	R636	QRD161J-822	RESISTOR
	R637	QRD161J-472	RESISTOR
	R638	QRD161J-472	RESISTOR
	R639	QRD161J-472	RESISTOR
	R640	QRD161J-472	RESISTOR
	R641	QRD161J-472	RESISTOR
	R642	QRD161J-472	RESISTOR
	R643	QRD161J-472	RESISTOR
	R644	QRD161J-124	RESISTOR
	R645	QRD161J-472	RESISTOR
	R646	QRD161J-124	RESISTOR
	R647	QRD161J-561	RESISTOR
	R648	QRD161J-561	RESISTOR
	R649	QRD161J-331	RESISTOR
	RA601	QRB049J-103	RESISTOR ARRAY
	OR	QRB047J-103	RESISTOR ARRAY
	RA602	QRB049J-472	RESISTOR ARRAY
	OR	QRB047J-472	NETWORK RESISTOR
	RA603	QRB069J-472	NETWORK RESISTOR
	OR	QRB067J-472	NETWORK RESISTOR
	C601	QCFB1EZ-223	CAPACITOR
	C602	QCFB1EZ-223	CAPACITOR
	C604	QETC1EM-335	E CAPACITOR
	C605	QETC1EM-475	E CAPACITOR
	C606	QETC1EM-475	E CAPACITOR
	C607	QETC1EM-475	E CAPACITOR
	C608	QETC1HM-105	E CAPACITOR
	C609	QCC11EK-473	CAPACITOR
	C610	QCF31HP-223	CAPACITOR
	C611	QCF31HP-223	CAPACITOR
	C612	QCC11EK-104	CAPACITOR
	L601	PU59152-100J	PEAKING COIL
	L602	PU59152-2R7J	PEAKING COIL
⚠	CF601	PU60030	RESONATOR
⚠	OR	PU60125	RESONATOR
	WR601	PW30112-G0AF6AF	PARALLEL WIRE
	CN601	PU59934-15	WIRE HOLDER
	CN602	PW30301-06624	DISP/SW WIRE
	OR	PW30312-06624	WIRE ASSY
	CN603	PU59555-5	CAP HOUSING
	CN604	PU58844-7	CAP HOUSING
	CN605	PU58844-9	CAP HOUSING
	CN606	PU59555-10	CAP HOUSING
	CN607	PU59555-9	CAP HOUSING
	CN608	PU58844-4	CAP HOUSING
	CN609	PU58844-10	CAP HOUSING
	CN610	PU58844-2	CAP HOUSING
⚠	CP601	ICP-F20	CIRCUIT PROTECTOR
	CP602	ICP-N25	CIRCUIT PROTECTOR

-MECHACON REGULATOR SECTION-

#⚠	REF NO.	PART NO.	PART NAME, DESCRIPTION
	C1	QETC1CM-107	E CAPACITOR
	CN1	PU58844-15	CAP HOUSING
	CN2	PU58844-4Y	CAP HOUSING
	CN3	PU58844-2R	CAP HOUSING
	CN4	PU58844-4R	CAP HOUSING
	CN5	PU58844-3	CAP HOUSING

****

TERMINAL BOARD ASSEMBLY <06>

	REF NO.	PART NO.	PART NAME, DESCRIPTION
	PWBA	PB20222A2	TERMINAL P ASSY
	J1	PU60452	MINI JACK

****

IF BOARD ASSEMBLY <07>

	REF NO.	PART NO.	PART NAME, DESCRIPTION
	PWBA	PB10112A-01	IF PWB ASS'Y
	IC1	M51496P	IC
	IC2	M5223P	IC
	IC3	BU4066B	IC
	Q1	2SC2636S,T	TRANSISTOR
	Q2	2SD1450S,T	TRANSISTOR
	Q3	DTC144WU	TRANSISTOR
	Q4	DTC144EU	TRANSISTOR
	Q5	2SA1532(C)	TRANSISTOR
	Q6	2SA1532(C)	TRANSISTOR
	Q7	2SA1576(RS)	TRANSISTOR
	Q8	2SC4081(RS)	TRANSISTOR
	Q9	2SC4081(RS)	TRANSISTOR
	Q11	2SA1532(C)	TRANSISTOR
	Q12	2SA1576(RS)	TRANSISTOR
	Q13	2SA1576(RS)	TRANSISTOR
	Q15	2SA1576(RS)	TRANSISTOR
	Q16	2SC4081(RS)	TRANSISTOR
	Q17	2SC4081(RS)	TRANSISTOR
	Q18	DTA114EU	TRANSISTOR
	Q19	2SK381(C)	FE TRANSISTOR
	Q20	DTC144EU	TRANSISTOR
	Q21	2SC4081(RS)	TRANSISTOR
	Q22	DTC144WU	TRANSISTOR
	Q23	2SC4081(RS)	TRANSISTOR
	Q25	2SC4081(RS)	TRANSISTOR
	Q26	2SK381(C)	FE TRANSISTOR
	Q32	2SC3311A(RS)	TRANSISTOR
	Q33	2SB1030A(RS)	TRANSISTOR
	D1	HVP21-01S4A	V.DIODE
	D2	MTZ11B	ZENER DIODE
	OR	RD11ES-T1B2	ZENER DIODE
	D4	DAN202U	DIODE
	D5	1SS133	DIODE
	D6	1SS133	DIODE
	D7	DAN202U	DIODE
	R1	NRSA63J-750N	S.CHIP RESISTOR
	R2	QVZ3531-471	V RESISTOR
	R3	NRSA63J-822N	S.CHIP RESISTOR
	R4	NRSA63J-472N	S.CHIP RESISTOR

#⚠	REF NO.	PART NO.	PART NAME, DESCRIPTION
	R5	NRSA63J-561N	RESISTOR
	R6	NRSA63J-102N	S.CHIP RESISTOR
	R7	QRD161J-271	RESISTOR
	R8	NRSA63J-180N	S.CHIP RESISTOR
	R9	NRSA63J-681N	S.CHIP RESISTOR
	R11	QVZ3518-102	V RESISTOR
	R12	NRSA63J-272N	S.CHIP RESISTOR
	R13	NRSA63J-103N	S.CHIP RESISTOR
	R15	NRSA63J-472N	S.CHIP RESISTOR
	R16	NRSA63J-222N	S.CHIP RESISTOR
	R17	QRD181J-104	RESISTOR
	R18	NRSA63J-560N	S.CHIP RESISTOR
	R19	NRSA63J-103N	S.CHIP RESISTOR
	R21	NRSA63J-104N	S.CHIP RESISTOR
	R22	QRD181J-153	RESISTOR
	R23	NRSA63J-102N	S.CHIP RESISTOR
	R24	NRSA63J-821N	S.CHIP RESISTOR
	R25	NRSA63J-104N	S.CHIP RESISTOR
	R26	NRSA63J-753N	S.CHIP RESISTOR
	R27	NRSA63J-473N	S.CHIP RESISTOR
	R28	NRSA63J-474N	S.CHIP RESISTOR
	R29	NRSA63J-104N	S.CHIP RESISTOR
	R32	NRSA63J-104N	S.CHIP RESISTOR
	R33	NRSA63J-154N	S.CHIP RESISTOR
	R34	NRSA63J-393N	S.CHIP RESISTOR
	R35	NRSA63J-102N	S.CHIP RESISTOR
	R36	NRSA63J-271N	S.CHIP RESISTOR
	R37	NRSA63J-102N	S.CHIP RESISTOR
	R38	NRSA63J-394N	S.CHIP RESISTOR
	R41	NRSA63J-561N	S.CHIP RESISTOR
	R42	NRSA63J-471N	S.CHIP RESISTOR
	R43	NRSA63J-101N	S.CHIP RESISTOR
	R44	NRSA63J-102N	S.CHIP RESISTOR
	R45	NRSA63J-331N	S.CHIP RESISTOR
	R46	NRSA63J-103N	S.CHIP RESISTOR
	R47	NRSA63J-750N	S.CHIP RESISTOR
	R49	NRSA63J-331N	S.CHIP RESISTOR
	R51	NRSA63J-102N	S.CHIP RESISTOR
	R52	NRSA63J-472N	S.CHIP RESISTOR
	R53	NRSA63J-102N	S.CHIP RESISTOR
	R54	QRD161J-122	RESISTOR
	R55	QRD161J-102	RESISTOR
	R56	NRSA63J-102N	S.CHIP RESISTOR
	R57	QVZ3518-103	V RESISTOR
	R58	NRSA63J-105N	S.CHIP RESISTOR
	R59	NRSA63J-102N	S.CHIP RESISTOR
	R61	NRSA63J-331N	S.CHIP RESISTOR
	R62	NRSA63J-473N	S.CHIP RESISTOR
	R63	NRSA63J-682N	S.CHIP RESISTOR
	R64	NRSA63J-223N	S.CHIP RESISTOR
	R65	NRSA63J-181N	S.CHIP RESISTOR
	R66	NRSA63J-472N	S.CHIP RESISTOR
	R67	NRSA63J-822N	S.CHIP RESISTOR
	R68	NRSA63J-154N	S.CHIP RESISTOR
	R69	QRD161J-101	RESISTOR
	R71	QRSA08J-271YN	RESISTOR
	R74	NRSA63J-563N	S.CHIP RESISTOR
	R75	NRSA63J-184N	S.CHIP RESISTOR
	R76	NRSA63J-331N	S.CHIP RESISTOR
	R77	NRSA63J-102N	S.CHIP RESISTOR
	R78	NRSA63J-122N	S.CHIP RESISTOR
	R79	NRSA63J-222N	S.CHIP RESISTOR
	R81	NRSA63J-473N	S.CHIP RESISTOR
	R82	NRSA63J-333N	S.CHIP RESISTOR
	R83	NRSA63J-102N	S.CHIP RESISTOR
	R85	NRSA63J-472N	S.CHIP RESISTOR
	R86	NRSA63J-391N	S.CHIP RESISTOR
	R87	NRSA63J-104N	S.CHIP RESISTOR
	R88	NRSA63J-473N	S.CHIP RESISTOR
	R89	NRSA63J-474N	S.CHIP RESISTOR
	R90	NRSA63J-823N	S.CHIP RESISTOR
	R91	NRSA63J-223N	S.CHIP RESISTOR
	R92	NRSA63J-682N	S.CHIP RESISTOR
	R93	QRD161J-103	RESISTOR
	R94	NRSA63J-105N	S.CHIP RESISTOR
	R95	NRSA63J-564N	S.CHIP RESISTOR
	R96	NRSA63J-272N	S.CHIP RESISTOR
	R97	NRSA63J-471N	S.CHIP RESISTOR
	R98	NRSA63J-102N	S.CHIP RESISTOR
	R99	NRSA63J-332N	S.CHIP RESISTOR
	R102	NRSA63J-472N	S.CHIP RESISTOR
	R104	QRD161J-331	RESISTOR
	R105	QRD181J-473	RESISTOR
	C1	QCTA1CH-3R0	FC CAPACITOR
	C2	QCTA1CH-3R0	FC CAPACITOR
	C3	NCB31HK-271A	CAPACITOR
	C4	QCYA1HK-222	CAPACITOR
	C5	QCYA1HK-222	CAPACITOR
	C6	QCYA1HK-222	CAPACITOR
	C7	QCYA1HK-222	CAPACITOR
	C8	PU57601-224MEZ	E CAPACITOR
	C9	QCYA1HK-103	CAPACITOR
	C11	NCB31HK-222A	S CHIP CAP
	C12	QETG1CM-476	E CAPACITOR
	C13	QCYA1HK-103	CAPACITOR
	C14	QCTA1CH-820	CAPACITOR
	C15	QETG1HM-335	E CAPACITOR
	C18	QCTA1CH-220	CAPACITOR
	C19	NCB31HK-102A	S CHIP CAP
	C21	NCB31HK-102A	S CHIP CAP
	C22	NCT06CH-470A	S.CHIP CAP
	C23	QETC1CM-107	E CAPACITOR
	C24	QEKG1HM-334	E CAPACITOR
	C25	QCTA1CH-220	CAPACITOR
	C26	QCTA1CH-220	CAPACITOR
	C27	QETG1CM-336	E CAPACITOR
	C28	QETG1CM-336	E CAPACITOR
	C29	QCYA1HK-223	CAPACITOR
	C31	NCF31HK-103A	CAPACITOR
	C32	QCYA1HK-223	CAPACITOR
	C33	QCYA1HK-223	CAPACITOR
	C34	QCYA1HK-223	CAPACITOR
	C35	QCTA1CH-220	CAPACITOR
	C36	QETG1CM-106	E CAPACITOR
	C37	NCB31HK-222A	S CHIP CAP
	C38	NCT06CH-470A	S.CHIP CAP
	C39	QEK41HM-104	M CAPACITOR
	C40	QCTA1CH-820	CAPACITOR
	C41	QEKG1CM-106	E CAPACITOR
	C42	QCYA1HK-472	CAPACITOR
	C43	QEK41HM-105	E CAPACITOR
	C44	QEN61EM-475	NP E CAPACITOR
	C45	NCB31HK-182A	S.CHIP CAP
	C46	NCT06CH-330A	S CHIP CAP
	C47	QCYA1HK-123	CAPACITOR
	C48	NCT06CH-2R0A	S.CHIP CAP
	C49	NCT06CH-5R0A	CAPACITOR
	C51	NCT06CH-470A	S CHIP CAP

#⚠	REF NO.	PART NO.	PART NAME, DESCRIPTION
	C60	QEKG1HM-104	E CAPACITOR
	L1	PU60025-1R0	PEAKING COIL
	L2	PU60519	IF.TRANSFORMER
	L3	PU59152-3R9K	PEAKING COIL
	L4	PU59152-150J	PEAKING COIL
	L5	PU59152-470J	PEAKING COIL
	L7	PU59152-220J	PEAKING COIL
	CF1	PU58558-2	CERAMIC FILTER
	CF2	PU58558-3	CERAMIC FILTER
	CF3	PU58558-4	CERAMIC FILTER
	CF4	PU58558	CERAMIC FILTER
	CF5	PU32990-2	CERAMIC FILTER
	CF6	PU32990-3	CERAMIC FILTER
	CF7	PU59039	CERAMIC FILTER
	CF8	PU32990-4	CERAMIC FILTER
	CF9	PU60680	CERAMIC FILTER
	SAW1	PU60679	SAW FILTER
	T1	PU60590	IF.TRANSFORMER
	T2	PU60591	IF.TRANSFORMER
	T3	PU60592	IF.TRANSFORMER
	T4	PU60593	IF.TRANSFORMER
	T6	PU60669	BAND PASS FILTER
	T7	PU60670	W-B.P.F
	T8	PU59243	F.HTRAP

****

****
*   TUNER CONTROL BOARD ASSEMBLY <08>   *
****

#⚠	REF NO.	PART NO.	PART NAME, DESCRIPTION
	PWBA	PB20208A1-01	TU/CTL BOARD ASSY
⚠	TNR	PU36421-3	U/V TUNER
	IC201	LA7910	IC
	IC202	M5223P	IC
	Q201	2SB810H,J	TRANSISTOR
	Q202	DTC144ES	TRANSISTOR
		OR 2SC3399	TRANSISTOR
		OR UN4213	TRANSISTOR
	Q204	2SC3311A(S)	TRANSISTOR
	Q205	2SA720	TRANSISTOR
		OR 2SB1278(QR)	TRANSISTOR
	Q206	2SC1740S(S)	TRANSISTOR
		OR 2SC3311A(S)	TRANSISTOR
	Q210	DTA114ES	TRANSISTOR
	Q211	DTC144ES	TRANSISTOR
	Q215	2SD1450S,T	TRANSISTOR
	Q216	DTA114TS	TRANSISTOR
	Q217	DTC144ES	TRANSISTOR
	Q218	DTC114ES	TRANSISTOR
	D201	LTZ-MR15	ZENER DIODE
	D202	HZT33-02	ZENER DIODE
	D203	1SS133	DIODE
	R201	QRD161J-182	RESISTOR
	R202	QRD161J-153	RESISTOR
	R206	QRD161J-332	RESISTOR
	R208	QRD161J-121	RESISTOR
	R209	QRD161J-473	RESISTOR
	R210	QRD161J-103	RESISTOR
	R211	QRD161J-103	RESISTOR
	R212	QRD161J-333	RESISTOR
	R214	QRD161J-394	RESISTOR
	R215	QRD161J-154	RESISTOR
	R216	QRD161J-154	RESISTOR
	R217	QRD161J-154	RESISTOR
	R218	QRD161J-103	RESISTOR
	R225	QRD161J-472	RESISTOR
	R226	QRD161J-472	RESISTOR
	R227	QRD161J-104	RESISTOR
	R228	QRD161J-472	RESISTOR
	R235	QRD161J-472	RESISTOR
	R236	QRD161J-472	RESISTOR
	R237	QRD161J-123	RESISTOR
	R238	QRD161J-123	RESISTOR
	R262	QRD161J-103	RESISTOR
	R263	QRD161J-103	RESISTOR
	R271	QRD161J-473	RESISTOR
	R273	QRD161J-222	RESISTOR
	R277	QRD161J-222	RESISTOR
	C202	QETC1CM-106	E CAPACITOR
	C204	QCBB1HJ-101	CAPACITOR
	C205	QETC1HM-106	E CAPACITOR
	C207	QCVB1CM-103	CAPACITOR
	C208	QFV71HJ-333	M CAPACITOR
	C209	QFV71HJ-153	M CAPACITOR
	C210	QFV71HJ-333	M CAPACITOR
	C211	QFV71HJ-153	M CAPACITOR
	C215	QETC1CM-106	E CAPACITOR
	C216	QETC1HM-105	E CAPACITOR
	C217	QETC1CM-106	E CAPACITOR
	C218	QETC1EM-335	E CAPACITOR
	C219	QETC1CM-106	E CAPACITOR
	C221	QETC1CM-106	E CAPACITOR
	C222	QETC1CM-106	E CAPACITOR
	C223	QEK61CM-476	E CAPACITOR
	C224	QEK61HM-224	E CAPACITOR
	L204	PU59152-6R8K	PEAKING COIL
⚠	TH201OR	PU52108-4R7KT	POSISTOR
⚠		OR PU52108-4R7T	POSISTOR
⚠		OR PU52108-4R7	POSISTOR
	HD1	PU36378	HOLDER
	CN201	PU59555-8	CAP HOUSING
	CN202	PU58844-4	CAP HOUSING
⚠	CP201	ICP-F10	CIRCUIT PROTECTOR
	JP4	QWE211-60A2A2	JUMP WIRE

****

****
*   AUDIO/CTL HEAD BOARD <12>   *
****

#⚠	REF NO.	PART NO.	PART NAME, DESCRIPTION
	PWBA	PB40029	AC HEAD BOARD
	CN1	PU58844-103B	CAP HOUSING
	CN2	PU58844-104	CAP HOUSING

TIMER BOARD ASSEMBLY <20>

#⚠	REF NO.	PART NO.	PART NAME, DESCRIPTION
	PWBA	PB10137A1-02	T/D/S PWB ASS'Y
	IC1	UPD75212ACW-014	IC
	IC2	M5278L56	IC
	IC3	IC-PST523H-2	IC
	Q1	2SC3311A(RS)	TRANSISTOR
	Q2	2SK656	FE TRANSISTOR
	D1	1SS133	DIODE
	D2	1SS133	DIODE
	D3	1SS133	DIODE
	D13	1SS132	DIODE
	D15	1SS132	DIODE
	D17	1SS133	DIODE
	D19	RD9.1ES-T1B2	ZENER DIODE
	D20	1SS133	DIODE
	R1	QRD161J-682	RESISTOR
	R2	QRD161J-103	RESISTOR
	R3	QRD161J-104	RESISTOR
	R4	QRD161J-102	RESISTOR
	R6	QRD161J-273	RESISTOR
	R7	QRD161J-472	RESISTOR
	R9	QRD161J-102	RESISTOR
	R11	QRD161J-103	RESISTOR
	R12	QRD161J-103	RESISTOR
	R14	QRD161J-103	RESISTOR
	R15	QRD161J-103	RESISTOR
	R16	QRD161J-103	RESISTOR
	R17	QRD161J-103	RESISTOR
	R18	QRD161J-103	RESISTOR
	R19	QRD161J-103	RESISTOR
	R20	QRD161J-103	RESISTOR
	R22	QRD161J-102	RESISTOR
	R25	QRD161J-103	RESISTOR
	R26	QRD161J-103	RESISTOR
	R27	QRD161J-103	RESISTOR
	R28	QRD161J-103	RESISTOR
	R29	QRD161J-103	RESISTOR
	R30	QRD161J-103	RESISTOR
	R31	QRD161J-333	RESISTOR
	R32	QRD161J-333	RESISTOR
	R35	QRD161J-333	RESISTOR
	R36	QRD161J-333	RESISTOR
	R37	QRD161J-333	RESISTOR
	R38	QRD161J-102	RESISTOR
	R39	QRD161J-333	RESISTOR
	RA2	QRB047J-224	NETWORK RESISTOR
	OR	QRB049J-224	NETWORK RESISTOR
	RA3	QRB087J-224	NETWORK RESISTOR
	OR	QRB089J-224	NETWORK RESISTOR
	C1	QET61CM-336	E CAPACITOR
	C2	QET60JM-336	E CAPACITOR
	C3	QETA0JM-338	E CAPACITOR
	C7	QCVB1CN-103	CAPACITOR
	C8	QCVB1CN-103	CAPACITOR
	C9	QCVB1CN-103	CAPACITOR
	C10	QET61CM-106	E CAPACITOR
	C11	QCT30CH-120	CAPACITOR
	C12	PU57672-200	TRIMMER CAPACITOR
	C14	QET60JM-336	E CAPACITOR
	C15	QCBB1HJ-471	CAPACITOR
	C16	QET61HM-336	E CAPACITOR
⚠	X2	PU60226	CRYSTAL RESONATOR

OPERETION BOARD ASSEMBLY <22>

#⚠	REF NO.	PART NO.	PART NAME, DESCRIPTION
	PWBA	PB20071G1	OPERATION BOARD ASSEMBLY
	IC201	GP1U501	INFRARED RAYS UNIT
	OR	SPS-413	INFRARED RAYS UNIT
	D200	MTZ5.1B	ZENER DIODE
	D201	SLR-55MC3F	LE DIODE
	D202	SLR-55MC3F	LE DIODE
	R200	QRD161J-821	RESISTOR
	R211	QRD161J-222	RESISTOR
	R212	QRD161J-222	RESISTOR
	R213	QRD161J-332	RESISTOR
	R214	QRD161J-472	RESISTOR
	R215	QRD161J-103	RESISTOR
	R216	QRD161J-222	RESISTOR
	R217	QRD161J-222	RESISTOR
	R221	QRD161J-471	RESISTOR
	R225	QRD161J-332	RESISTOR
	R228	QRD161J-223	RESISTOR
	R229	QRD161J-563	RESISTOR
	S201	PU57550	TACT SWITCH
	S203	PU57550	TACT SWITCH
	S204	PU57550	TACT SWITCH
	S205	PU57550	TACT SWITCH
	S206	PU57550	TACT SWITCH
	S207	PU57550	TACT SWITCH
	S208	PU57550	TACT SWITCH
	S209	PU57550	TACT SWITCH
	S213	PU57550	TACT SWITCH
	S214	PU57550	TACT SWITCH
	HD1	PQ31805-1-3	HOLDER(POWER.LED)
	CN201	PW30202-05D58	WIRE ASSY
		PU59555-105	CAP HOUSING
	CN203	PU59513-3	CAP HOUSING

SWITCH /DISPLAY BOARD ASSEMBLY <28>

#⚠	REF NO.	PART NO.	PART NAME, DESCRIPTION
	FDP	PU59951-2	FLUORESCENT DISPLAY PANEL
	PWBA	PB10137A2-02	SWITCH/DISPLAY BOARD ASSY
	IC202	M50255P	IC
	D101	1SS132	DIODE
	D102	1SS132	DIODE

#⚠	REF NO.	PART NO.	PART NAME, DESCRIPTION
	D103	1SS132	DIODE
	D104	1SS132	DIODE
	D105	1SS132	DIODE
	D106	1SS132	DIODE
	D107	1SS132	DIODE
	D108	1SS132	DIODE
	D109	1SS132	DIODE
	D202	SLH-56VC3F	LE DIODE
	D203	SLH-56DC3F	LE DIODE
	D204	SLR-55MC3F	LE DIODE
	D205	SLR-55MC3F	LE DIODE
	D206	SLR-55MC3F	LE DIODE
	D801	SLH-34VR3F	LE DIODE
	D802	SLH-34VR3F	LE DIODE
	D803	SLH-34VR3F	LE DIODE
	D804	SLH-34VR3F	LE DIODE
	D805	SLH-34VR3F	LE DIODE
	D806	SLH-34VR3F	LE DIODE
	D807	SLH-34VR3F	LE DIODE
	D808	SLH-34VR3F	LE DIODE
	D809	SLH-34VR3F	LE DIODE
	R202	QRD161J-331	RESISTOR
	R203	QRD161J-331	RESISTOR
	R204	QRD161J-331	RESISTOR
	R230	QRD161J-472	RESISTOR
	R231	QRD161J-472	RESISTOR
	R402	PU59166	V RESISTOR
	R801	QRD161J-331	RESISTOR
	R802	QRD161J-331	RESISTOR
	R807	QRD161J-331	RESISTOR
	S1	PU53598	TACT SWITCH
	S2	PU53598	TACT SWITCH
	S3	PU53598	TACT SWITCH
	S4	PU53598	TACT SWITCH
	S5	PU53598	TACT SWITCH
	S6	PU53598	TACT SWITCH
	S7	PU53598	TACT SWITCH
	S8	PU53598	TACT SWITCH
	S9	PU53598	TACT SWITCH
	S10	PU53598	TACT SWITCH
	S12	PU53598	TACT SWITCH
	S13	PU53598	TACT SWITCH
	S14	PU53598	TACT SWITCH
	S17	PU53598	TACT SWITCH
	S18	PU53598	TACT SWITCH
	S19	PU53598	TACT SWITCH
	S21	PU53598	TACT SWITCH
	S22	PU53598	TACT SWITCH
	S23	PU53598	TACT SWITCH
	S24	PU53598	TACT SWITCH
	S25	PU53598	TACT SWITCH
	S26	PU53598	TACT SWITCH
	S27	PU53598	TACT SWITCH
	S28	PU53598	TACT SWITCH
	S210	PU53598	TACT SWITCH
	S211	PU53598	TACT SWITCH
	S402	PU58488-1-1	SLIDE SWITCH
	S403	PU58486-1-1	SLIDE SWITCH
	S406	PU58486-1-1	SLIDE SWITCH
	S801	PU58486-1-1	SLIDE SWITCH
	S802	PU58909	SLIDE SWITCH
	S803	PU58486-1-1	SLIDE SWITCH
	S804	PU58486-1-1	SLIDE SWITCH
	HD1	PQM30038-2-2	LED HOLDER,X14
	HD2	PQ31333-1-2	D.HOLDER (L)
	HD3	PQ31334-1-2	D.HOLDER (R)

MEMORY BOARD ASSEMBLY <35>

#⚠	REF NO.	PART NO.	PART NAME, DESCRIPTION
	PWBA	PB20208A2	MEMORY BOARD ASSY
	IC101	MN1220	IC
	R101	QRD161J-104	RESISTOR
	R102	QRD161J-104	RESISTOR
	R103	QRD161J-104	RESISTOR
	CN101	PU60488-7	CAP HOUSING

UPPER DRUM BOARD <41>

#⚠	REF NO.	PART NO.	PART NAME, DESCRIPTION
	PWB1	PDM3017	UPPER DRUM BOARD

PRE/REC BOARD ASSEMBLY <43>

#⚠	REF NO.	PART NO.	PART NAME, DESCRIPTION
	PWBA	PB30067A	PRE/REC BOARD ASSY
	IC1	HA118019NT	IC
	Q1	2SA1309R,S	TRANSISTOR
	Q2	2SA1309R,S	TRANSISTOR
	Q3	2SC1740S(RS)	TRANSISTOR
	Q4	2SC1740S(RS)	TRANSISTOR
	Q5	DTC124ES	TRANSISTOR
	Q6	DTC124ES	TRANSISTOR
	Q7	DTC144WS	TRANSISTOR
	Q8	DTC124ES	TRANSISTOR
	Q9	DTC124ES	TRANSISTOR
	Q10	DTA124ES	TRANSISTOR
	Q11	DTA124ES	TRANSISTOR
	D1	MA165	DIODE
	OR	1SS133	DIODE
	D2	MA165	DIODE
	OR	1SS133	DIODE
	D3	MA165	DIODE
	OR	1SS133	DIODE
	R1	QRD161J-102	RESISTOR
	R2	QRD161J-182	RESISTOR
	R3	QRD161J-222	RESISTOR
	R4	QRD161J-561	RESISTOR
	R5	QRD161J-681	RESISTOR
	R6	QRD161J-561	RESISTOR
	R7	QRD161J-332	RESISTOR

#⚠	REF NO.	PART NO.	PART NAME, DESCRIPTION
	R8	QRD161J-562	RESISTOR
	R9	QRD161J-102	RESISTOR
	R10	QRD161J-102	RESISTOR
	R11	QRD161J-681	RESISTOR
	R12	QRD161J-122	RESISTOR
	R13	QRD161J-681	RESISTOR
	R14	QRD161J-102	RESISTOR
	R15	QRD161J-182	RESISTOR
	R16	QRD161J-222	RESISTOR
	R17	QRD161J-223	RESISTOR
	R18	QRD161J-223	RESISTOR
	R19	QRD161J-223	RESISTOR
	R20	QRD161J-184	RESISTOR
	R21	QRD161J-223	RESISTOR
	R22	QRD161J-474	RESISTOR
	R23	QRD161J-223	RESISTOR
	R24	QRD161J-103	RESISTOR
	R25	QRD161J-103	RESISTOR
	R26	QRD161J-103	RESISTOR
	R27	QRD161J-103	RESISTOR
	R28	QRD161J-681	RESISTOR
	R29	QRD161J-561	RESISTOR
	R30	QRD161J-820	RESISTOR
	R31	QRD161J-820	RESISTOR
	R32	PU57457-221	V RESISTOR
	R33	PU57457-221	V RESISTOR
	C1	QCBB1HJ-471	CAPACITOR
	C2	QCSB1HJ-180	CAPACITOR
	C3	QCVB1CN-103	CAPACITOR
	C4	QCSB1HJ-160	CAPACITOR
	C5	QCSB1HJ-150	CAPACITOR
	C6	QCVB1CN-103	CAPACITOR
	C7	QCSB1HJ-200	CAPACITOR
	C8	QCBB1HJ-151	CAPACITOR
	C9	QCSB1HJ-240	CAPACITOR
	C10	QCBB1HJ-561	CAPACITOR
	C11	QCSB1HJ-220	CAPACITOR
	C12	QCSB1HJ-360	CAPACITOR
	C13	QCVB1CN-103	CAPACITOR
	C14	QCC11EJ-473	CAPACITOR
	C15	QCVB1CN-103	CAPACITOR
	C16	QEK60JM-476	E CAPACITOR
	C17	QCVB1CN-103	CAPACITOR
	C18	QCBB1HJ-681	CAPACITOR
	C19	QEK61HM-104	E CAPACITOR
	C20	QCVB1CN-103	CAPACITOR
	C21	QCSB1HJ-680	CAPACITOR
	C22	QCVB1CN-103	CAPACITOR
	C24	QCVB1CN-103	CAPACITOR
	C25	QFZ0096-224	MM CAPACITOR
	C28	QFZ0096-224	MM CAPACITOR
	C29	QCVB1CN-103	CAPACITOR
	C30	QCVB1CN-103	CAPACITOR
	C31	QFZ0096-224	MM CAPACITOR
	C32	QCSB1HJ-270	CAPACITOR
	C33	QCSB1HJ-270	CAPACITOR
	C34	QFZ0096-224	MM CAPACITOR
	C35	QCVB1CN-103	CAPACITOR
	C36	QEK60JM-476	E CAPACITOR
	C37	QCVB1CN-103	CAPACITOR
	L1	PU59152-220J	PEAKING COIL
	L2	PU59152-560J	PEAKING COIL
	L3	PU59152-330J	PEAKING COIL
	L4	PU59152-151J	PEAKING COIL
	L6	PU59152-330J	PEAKING COIL
	L7	PU59152-560J	PEAKING COIL

#⚠	REF NO.	PART NO.	PART NAME, DESCRIPTION
	L8	PU48530-101K	PEAKING COIL
	L9	PU48530-101K	PEAKING COIL
	L10	PU59152-560J	PEAKING COIL
	TP	PU57545	TEST PIN

****

****
* SERVO BOARD ASSEMBLY <48> *
****

#⚠	REF NO.	PART NO.	PART NAME, DESCRIPTION
	PWBA	PB20219A	SERVO PWB ASS'Y
	IC1	HD49722NT	IC
	IC61	BU2767S	IC
	IC62	BU4069UB	IC
	Q1	DTA124ES	TRANSISTOR
		OR UN4112	TRANSISTOR
		OR 2SA1346	TRANSISTOR
	Q2	DTA124ES	TRANSISTOR
		OR 2SA1346	TRANSISTOR
		OR UN4112	TRANSISTOR
	D1	1SS133	DIODE
		OR MA165	DIODE
	D2	1SS133	DIODE
		OR MA165	DIODE
	D3	1SS133	DIODE
		OR MA165	DIODE
	D5	1SS133	DIODE
		OR MA165	DIODE
	D6	1SS133	DIODE
		OR MA165	DIODE
	D9	1SS133	DIODE
		OR MA165	DIODE
	D10	1SS133	DIODE
		OR MA165	DIODE
	D12	1SS133	DIODE
		OR MA165	DIODE
	D21	1SS133	DIODE
		OR MA165	DIODE
	D24	1SS133	DIODE
		OR MA165	DIODE
	D25	1SS133	DIODE
		OR MA165	DIODE
	D62	1SS133	DIODE
		OR MA165	DIODE
	D64	1SS133	DIODE
		OR MA165	DIODE
	D65	1SS133	DIODE
		OR MA165	DIODE
	D66	1SS133	DIODE
		OR MA165	DIODE
	D67	1SS133	DIODE
		OR MA165	DIODE
	D68	1SS133	DIODE
		OR MA165	DIODE
	D70	1SS133	DIODE
		OR MA165	DIODE
	D71	1SS133	DIODE
		OR MA165	DIODE
	R1	QRD161J-103	RESISTOR
	R2	QRD161J-222	RESISTOR
	R3	QRD161J-273	RESISTOR

#⚠	REF NO.	PART NO.	PART NAME, DESCRIPTION
	R4	QVZ3518-684AZ	V RESISTOR
	OR	QVZ3518-684	V RESISTOR
	R5	QRD161J-103	RESISTOR
	R6	QRD161J-394	RESISTOR
	R7	ERT-D2FHJ503S	THERMISTOR
	R8	QRD161J-823	RESISTOR
	R9	QRD161J-823	RESISTOR
	R10	QRD161J-223	RESISTOR
	R11	QRD161J-823	RESISTOR
	R21	QRD161J-102	RESISTOR
	R22	QRD161J-155	RESISTOR
	R25	QRD161J-105	RESISTOR
	R26	QRD161J-102	RESISTOR
	R28	QRD161J-222	RESISTOR
	R29	QRD161J-473	RESISTOR
	R30	QRD161J-475	RESISTOR
	R31	QRD161J-103	RESISTOR
	R32	QRD161J-153	RESISTOR
	R33	QRD161J-182	RESISTOR
	R34	QRD161J-273	RESISTOR
	R35	QRD161J-105	RESISTOR
	R36	QRD161J-105	RESISTOR
	R37	QRD161J-105	RESISTOR
	R38	QRD161J-393	RESISTOR
	R39	QRD161J-273	RESISTOR
	R40	QRD161J-105	RESISTOR
	R41	QRD161J-104	RESISTOR
	R43	QRD161J-102	RESISTOR
	R44	QRD161J-104	RESISTOR
	R45	QVZ3518-474AZ	V RESISTOR
	OR	QVZ3523-474AZ	V RESISTOR
	R46	QRD161J-103	RESISTOR
	R56	QRD161J-682	RESISTOR
	R57	QRD161J-102	RESISTOR
	R58	QRD161J-334	RESISTOR
	R61	QRD161J-103	RESISTOR
	R63	QRD161J-153	RESISTOR
	R64	QRD161J-154	RESISTOR
	R65	QRD161J-104	RESISTOR
	R66	QRD161J-824	RESISTOR
	R67	QRD161J-105	RESISTOR
	R68	QRD161J-104	RESISTOR
	R69	QVZ3518-105AZ	V RESISTOR
	OR	QVZ3518-105	V RESISTOR
	R70	QRD161J-274	RESISTOR
	R71	QRD161J-224	RESISTOR
	R72	QVZ3518-105AZ	V RESISTOR
	OR	QVZ3518-105	V RESISTOR
	R73	QRD161J-394	RESISTOR
	R74	QRD161J-124	RESISTOR
	R75	QRD161J-103	RESISTOR
	R76	QRD161J-472	RESISTOR
	R78	QRD161J-472	RESISTOR
	R79	QRD161J-154	RESISTOR
	R80	QRD161J-472	RESISTOR
	R81	QRD161J-393	RESISTOR
	R82	QRD161J-273	RESISTOR
	R83	QRD161J-472	RESISTOR
	R85	QRD161J-123	RESISTOR
	R86	QRD161J-822	RESISTOR
	R90	QRD161J-822	RESISTOR
	R91	QRD161J-103	RESISTOR
	R93	QRD161J-103	RESISTOR
	C1	QFV71HJ-154	M CAPACITOR

#⚠	REF NO.	PART NO.	PART NAME, DESCRIPTION
	C2	QCC31CK-332	CAPACITOR
	C3	QCVB1CN-103	CAPACITOR
	C21	QCBB1HJ-102	CAPACITOR
	C22	QEK61AM-226	E CAPACITOR
	C23	QEK61AM-226	E CAPACITOR
	C24	QCSB1HJ-150	CAPACITOR
	C26	QCXB1CN-272	CAPACITOR
	C27	QEK61HM-105	E CAPACITOR
	C28	QFV71HJ-153	M CAPACITOR
	C29	QCS31HJ-561	CAPACITOR
	C30	QCBB1HJ-102	CAPACITOR
	C32	QEK61AM-226	E CAPACITOR
	C33	QCC31CK-102	CAPACITOR
	C34	QFL41HJ-122	M CAPACITOR
	C35	QFV71HJ-334	M CAPACITOR
	C36	QEK61EM-475	E CAPACITOR
	C37	QEK61EM-475	E CAPACITOR
	C38	QEK61EM-106	E CAPACITOR
	C39	QEK61EM-106	E CAPACITOR
	C40	QEN61HM-105	NP E CAPACITOR
	C41	QFV71HJ-104	M CAPACITOR
	C42	QCS31HJ-471	CAPACITOR
	C43	QFL41HJ-682	M CAPACITOR
	C44	QEK61HM-105	E CAPACITOR
	C62	QCC31CK-393	CAPACITOR
	C63	QCC31CK-104	CAPACITOR
	C64	QCC31CK-104	CAPACITOR
	C65	QCC31CK-104	CAPACITOR
	C66	QCC31CK-393	CAPACITOR
	C67	QCBB1HJ-101	CAPACITOR
	C68	QCBB1HJ-101	CAPACITOR
	C69	QCBB1HJ-121	CAPACITOR
	C70	QFV71HJ-224	M CAPACITOR
	C71	QCBB1HJ-102	CAPACITOR
	CN1	PU58844-5	CAP HOUSING
	CN2	PU58844-3	CAP HOUSING
	CN3	PU58844-2	CAP HOUSING
	CN4	PU59555-7	CAP HOUSING
	CN5	PU59555-9	CAP HOUSING
	CN6	PU59555-10	CAP HOUSING
	CN7	PU58844-2	CAP HOUSING
	CN8	PU58844-4	CAP HOUSING

****

COLOR BOARD ASSEMBLY <45>

#⚠	REF NO.	PART NO.	PART NAME, DESCRIPTION
	PWBA	PB10124A	COLOR BOARD ASSY
⚠	IC101	PU22517C	COLOR MODULE ASSY
	IC201	M51646SP	IC
	IC251	BA7007	IC
	IC301	NJM2233AS	IC
	IC302	NJM2233AS	IC
	IC303	M5239L	IC
	Q103	DTC144WS	TRANSISTOR
	Q201	2SC1740S(QRS)	TRANSISTOR

#⚠	REF NO.	PART NO.	PART NAME, DESCRIPTION
	Q212	2SC1740S(QRS)	TRANSISTOR
	Q251	2SC1740S(QRS)	TRANSISTOR
	Q281	2SC1740S(QRS)	TRANSISTOR
	Q282	2SC1740S(QRS)	TRANSISTOR
	Q283	2SC1740S(QRS)	TRANSISTOR
	Q284	2SC1740S(QRS)	TRANSISTOR
	Q285	2SC1740S(QRS)	TRANSISTOR
	Q301	DTC144WS	TRANSISTOR
	Q302	DTC144WS	TRANSISTOR
	D102	MA165	DIODE
	OR	1SS133	DIODE
	D103	MA165	DIODE
	OR	1SS133	DIODE
	D105	MA165	DIODE
	OR	1SS133	DIODE
	D211	MA165	DIODE
	OR	1SS133	DIODE
	D212	MA165	DIODE
	OR	1SS133	DIODE
	D301	MA165	DIODE
	OR	1SS133	DIODE
	D302	MA165	DIODE
	OR	1SS133	DIODE
	D303	MA165	DIODE
	OR	1SS133	DIODE
	D304	MA165	DIODE
	OR	1SS133	DIODE
	R101	QRD161J-102	RESISTOR
	R102	QRD161J-273	RESISTOR
	R112	QRD161J-102	RESISTOR
	R117	QRD161J-222	RESISTOR
	R118	QRD161J-102	RESISTOR
	R119	QRD161J-103	RESISTOR
	R120	QRD161J-102	RESISTOR
	R122	QRD161J-103	RESISTOR
	R123	QRD161J-155	RESISTOR
	R201	QRD161J-102	RESISTOR
	R202	QRD161J-102	RESISTOR
	R203	QRD161J-333	RESISTOR
	R204	QRD161J-393	RESISTOR
	R205	QRD161J-222	RESISTOR
	R206	QRD161J-122	RESISTOR
	R211	QRD161J-102	RESISTOR
	R212	QRD161J-122	RESISTOR
	R213	QRD161J-681	RESISTOR
	R214	QRD161J-121	RESISTOR
	R215	QRD161J-152	RESISTOR
	R216	QRD161J-563	RESISTOR
	R217	QRD161J-103	RESISTOR
	R218	QRD161J-103	RESISTOR
	R219	QRD161J-562	RESISTOR
	R220	QRD161J-102	RESISTOR
	R221	QRD161J-182	RESISTOR
	R222	QRD161J-820	RESISTOR
	R223	QRD161J-561	RESISTOR
	R224	QRD161J-102	RESISTOR
	R225	QRD161J-102	RESISTOR
	R233	QRD161J-222	RESISTOR
	R251	QRD161J-332	RESISTOR
	R252	QRD161J-154	RESISTOR

#⚠	REF NO.	PART NO.	PART NAME, DESCRIPTION
	R253	QRD161J-563	RESISTOR
	R254	QRD161J-182	RESISTOR
	R255	QVZ3521-472	V RESISTOR
	R256	QRD161J-103	RESISTOR
	R257	QRD161J-562	RESISTOR
	R258	QRD161J-333	RESISTOR
	R259	QRD161J-183	RESISTOR
	R260	QRD161J-102	RESISTOR
	R261	QRD161J-393	RESISTOR
	R281	QRD161J-333	RESISTOR
	R282	QRD161J-273	RESISTOR
	R283	QRD161J-222	RESISTOR
	R284	QRD161J-152	RESISTOR
	R285	QRD161J-272	RESISTOR
	R286	QRD161J-181	RESISTOR
	R287	QRD161J-473	RESISTOR
	R288	QRD161J-102	RESISTOR
	R289	QRD161J-102	RESISTOR
	R301	QRD161J-332	RESISTOR
	R302	QRD161J-223	RESISTOR
	R303	QRD161J-153	RESISTOR
	R304	QRD161J-123	RESISTOR
	R305	QRD161J-153	RESISTOR
	R306	QRD161J-393	RESISTOR
	R307	QRD161J-103	RESISTOR
	C103	QEK60JM-337	E CAPACITOR
	C104	QEK61EM-475	E CAPACITOR
	C105	QEK61HM-104	E CAPACITOR
	C106	QCFB1EZ-223	CAPACITOR
	C107	QCVB1CN-103	CAPACITOR
	C108	QEK61HM-224	E CAPACITOR
	C114	QCFB1EZ-223	CAPACITOR
	C117	QETC0JM-337	E CAPACITOR
	C118	QETC1EM-335	E CAPACITOR
	C120	QCC11EJ-473	CAPACITOR
	C121	QETC1HM-474	E CAPACITOR
	C122	QCSB1HJ-680	CAPACITOR
	C123	QCBB1HJ-820	CAPACITOR
	C201	QETC0JM-476	E CAPACITOR
	C202	QCVB1CN-103	CAPACITOR
	C203	QCVB1CN-103	CAPACITOR
	C204	QCSB1HJ-330	CAPACITOR
	C205	QCBB1HJ-121	CAPACITOR
	C211	QCVB1CN-103	CAPACITOR
	C212	QCVB1CN-103	CAPACITOR
	C213	QCVB1CN-103	CAPACITOR
	C214	QCVB1CN-103	CAPACITOR
	C215	QEK61CM-106	E CAPACITOR
	C216	QCVB1CN-103	CAPACITOR
	C217	QEK61AM-226	E CAPACITOR
	C219	QFN31HJ-273	M CAPACITOR
	C220	QCVB1CN-103	CAPACITOR
	C221	QCVB1CN-103	CAPACITOR
	C222	QEK61EM-475	E CAPACITOR
	C223	QEK60JM-107	E CAPACITOR
	C224	QCVB1CN-103	CAPACITOR
	C225	QCVB1CN-103	CAPACITOR
	C226	QCVB1CN-103	CAPACITOR
	C227	QEK61CM-106	E CAPACITOR
	C228	QFN41HJ-104	M CAPACITOR
	C229	QCVB1CN-103	CAPACITOR
	C230	QCVB1CN-103	CAPACITOR
	C231	QCVB1CN-103	CAPACITOR
	C234	QCVB1CN-103	CAPACITOR

#⚠	REF NO.	PART NO.	PART NAME, DESCRIPTION
	C251	QETC1CM-476	E CAPACITOR
	C252	QCVB1CN-103	CAPACITOR
	C253	QETC1AM-336	E CAPACITOR
	C254	QFN31HJ-152	M CAPACITOR
	C255	QFN31HJ-272	M CAPACITOR
	C256	QFN31HJ-223	M CAPACITOR
	C257	QETC1CM-106	E CAPACITOR
	C258	QCVB1CN-103	CAPACITOR
	C281	QCVB1CN-103	CAPACITOR
	C282	QCVB1CN-103	CAPACITOR
	C301	QETC0JM-476	E CAPACITOR
	C302	QCVB1CN-103	CAPACITOR
	C303	QCVB1CN-103	CAPACITOR
	C304	QCVB1CN-103	CAPACITOR
	C305	QCVB1CN-103	CAPACITOR
	C306	QCVB1CN-103	CAPACITOR
	L101	PU59153-101K	INDUCTOR
	L102	PU60165-150G	COIL
	L103	PU48530-222J	PEAKING COIL
	L201	PU48530-101K	PEAKING COIL
	L202	PU59152-390J	PEAKING COIL
	L211	PU60220	COIL
	L212	PU60221	COIL
	L213	PU48530-101K	PEAKING COIL
	L214	PU59152-121J	PEAKING COIL
	L251	PU49057	LC BLOCK
	L252	PU48530-101K	PEAKING COIL
	L253	PU47051-562	COIL
	L301	PU48530-101K	PEAKING COIL
	L302	PU48530-101K	PEAKING COIL
	EQ101	PU53501-11	EQUALIZER
	OR	PU53501-6	EQUALIZER
	EQ102	PU60681	EQUALIZER
	EQ201	PU53501-5	EQUALIZER
	LPF101	PU58022	LOW PASS FILTER
	BPF101	PU57399-3	BAND PASS FILTER
	OR	PU57399-2	BAND PASS FILTER
	BPF201	PU54437-2	BAND PASS FILTER
	BPF202	PU54420-2	BAND PASS FILTER
	BPF203	PU54421-2	BAND PASS FILTER
	CF251	PU56983	CERAMIC FILTER
	DL101	PU60322-2	DELAY LINE
⚠	X101	PU60059	CRYSTAL RESONATOR
	T101	PU60057-3	TANK FILTER
	OR	PU60057-2	TANK FILTER
	CN101	PU59555-107	CAP HOUSING
	CN201	PU58844-109	CAP HOUSING
	CN202	PU58844-106	CAP HOUSING
	CN203	PU58844-102	CAP HOUSING

*** DECK TERMINAL BOARD ASSEMBLY <51><53> ***

#⚠	REF NO.	PART NO.	PART NAME, DESCRIPTION
	PWBA	PU22509C-01	DECK TERMINAL BOARD ASSY
			-DECK TERMINAL BOARD SECTION <51>-
	PWBA1	PU22509A1-01	DECK TERMINAL BOARD ASSY
	R1	QRD181J-151	RESISTOR
	R3	QRD181J-331	RESISTOR
	PS1	PU60271	PHOTO INTERRUPTER
	WR1	PW30110-26DD885	PARALLEL WIRE,CN1
	CN1	PU59933-15	WIRE TRAP
			-REC SAFETY BOARD SECTION <53>-
	PWBA3	PU22509A3	REC SAFETY BOARD ASSY
	SW	PU58644-1-3	REC SAFETY SWITCH

*** RELAY BOARD ASSEMBLY <52> ***

	PWBA2	PU22509C2	RELAY BOARD ASSY
	LC1	PU59809-222T	N FILTER
	LC2	PU59809-222T	N FILTER
	WR2	PW30113-G0ABZ62	PARALLEL WIRE

*** END SENSOR BOARD ASSEMBLY <54> ***

	PWBA4	PU22509A4	END SENSOR BOARD ASSY
	Q1	PN268R-NC	PHOTO TRANSISTOR
	CN1	PU59945-102	WIRE SOCKET

*** CASSETTE HOUSING BOARD <56> ***

	PWB1	PB30043	CASSETTE HOUSING BOARD
	Q1	PN268R-NC	PHOTO TRANSISTOR
	R1	QRD161J-471	RESISTOR
	PHS1	PU58879	PHOTO INTERRUPTER
	CN1	PU58844-106	CAP HOUSING

#⚠	REF NO.	PART NO.	PART NAME, DESCRIPTION

****
*   JUMP DETECTOR BOARD ASSEMBLY <70>   *
****

#⚠	REF NO.	PART NO.	PART NAME, DESCRIPTION
	PWBA	PB30081A1	JUMP DET BOARD ASSY
	IC401	BA7023L	IC
	IC402	BU4030B	IC
	IC403	BA222	IC
	IC404	TC4013BP	IC
	Q401	2SA1309R,S	TRANSISTOR
		OR 2SA933S(RS)	TRANSISTOR
	Q611	DTC124ES	TRANSISTOR
	D411	1SS133	DIODE
		OR MA165	DIODE
	D611	1SS133	DIODE
		OR MA165	DIODE
	D612	1SS133	DIODE
		OR MA165	DIODE
	D613	1SS133	DIODE
		OR MA165	DIODE
	D614	1SS133	DIODE
		OR MA165	DIODE
	D617	1SS133	DIODE
		OR MA165	DIODE
	R401	QRD161J-222	RESISTOR
	R402	QRD161J-391	RESISTOR
	R403	QRD161J-223	RESISTOR
	R404	QRD161J-472	RESISTOR
	R405	QRD161J-124	RESISTOR
	R406	QRD161J-184	RESISTOR
	R407	QRD161J-683	RESISTOR
	R408	QRD161J-153	RESISTOR
	R409	QRD161J-105	RESISTOR
	R410	QVZ3521-473	V RESISTOR
	R411	QRD161J-105	RESISTOR
	R412	QRD161J-473	RESISTOR
	R413	QRD161J-104	RESISTOR
	R414	QRD161J-223	RESISTOR
	R633	QRD161J-103	RESISTOR
	R643	QRD161J-222	RESISTOR
	R644	QRD161J-222	RESISTOR
	R645	QRD161J-103	RESISTOR
	C401	QFN31HJ-152	M CAPACITOR
	C402	QETC1HM-105	E CAPACITOR
	C403	QFN31HJ-222	M CAPACITOR
	C404	QFN31HJ-332	M CAPACITOR
	C405	QETC1CM-106	E CAPACITOR
	C406	QETC0JM-107	E CAPACITOR
	C407	QCVB1CN-103	CAPACITOR
	C408	QFN31HJ-103	M CAPACITOR
	C409	QFN31HJ-273	M CAPACITOR
	C410	QETC1HM-105	E CAPACITOR
	C411	QCBB1HJ-331	CAPACITOR
	C412	QETC1HM-105	E CAPACITOR
	C413	QFN31HJ-103	M CAPACITOR
	C414	QCVB1CN-103	CAPACITOR
	C415	QFN31HJ-273	M CAPACITOR
	C416	QCVB1CN-103	CAPACITOR
	C417	QETC1AM-476	E CAPACITOR
	L401	PU48530-101K	PEAKING COIL
	L402	PU48530-101K	PEAKING COIL

⚠	REF. No.	PART No.	PART NAME, DESCRIPTION
	R512	NRSA63J-103N	RESISTOR
	C501	NCS31HJ-101A	CAPACITOR
	C502	NCB31CK-223A	CAPACITOR
	C505	QCT05CH-120	C CAPACITOR

— IF SUB (2) <72> —

⚠	REF. No.	PART No.	PART NAME, DESCRIPTION
	PWBA	PB20366A2-03	TU IF SUB BOARD ASSEMBLY
	Q401	DTC144EU	TRANSISTOR
	Q402	DTC123EU	CHIP DEGI TR.
	Q403	DTC123EU	CHIP DEGI TR.
	Q404	2SD1819A(RS)	TRANSISTOR
	D401	MA151WA	DIODE
	R401	QRSA08J-104YN	RESISTOR
	C401	QCSA1HJ-471	CAPACITOR
	C402	QCYA1HK-103	CAPACITOR
	C403	QCYA1HK-103	CAPACITOR

****

TUNER CONTROL BOARD ASSEMBLY <08>

⚠	REF. No.	PART No.	PART NAME, DESCRIPTION
	PWBA	PB20208A1-03	TUNER CONTROL BOARD ASSEMBLY
⚠	TNR1	PU36421-3-2	UHF/VHF TUNER
⚠	IC201	LA7910	IC
	IC202	M5223P	IC
	Q201	2SB810H,J	TRANSISTOR
	Q202	DTC144ES	TRANSISTOR
	or	UN4213	TRANSISTOR
	or	2SC3399	TRANSISTOR
	Q204	2SC3311A(S)	TRANSISTOR
	Q205	2SA720	TRANSISTOR
	or	2SB1278(QR)	TRANSISTOR
	Q206	2SC1740S(S)	TRANSISTOR
	or	2SC3311A(S)	TRANSISTOR
	Q210	DTA114ES	TRANSISTOR
	Q211	DTC144ES	TRANSISTOR
	Q215	2SD1450S,T	TRANSISTOR
	Q216	DTC144ES	TRANSISTOR
	Q217	DTC144ES	TRANSISTOR
⚠	Q218	DTA144ES	TRANSISTOR
	Q220	2SC3068	TRANSISTOR
	D201	LTZ-MR15	ZENER DIODE
	D202	HZT33-02	ZENER DIODE
	D203	1SS133	DIODE
	D210	1SS133	DIODE
	R201	QRD161J-182	RESISTOR
	R202	QRD161J-153	RESISTOR
	R206	QRD161J-332	RESISTOR
	R208	QRD161J-121	RESISTOR
	R209	QRD161J-473	RESISTOR
	R210	QRD161J-103	RESISTOR
	R211	QRD161J-103	RESISTOR
	R212	QRD161J-333	RESISTOR
	R214	QRD161J-394	RESISTOR
	R215	QRD161J-154	RESISTOR
	R216	QRD161J-154	RESISTOR
	R217	QRD161J-154	RESISTOR
	R218	QRD161J-103	RESISTOR
	R225	QRD161J-472	RESISTOR
	R226	QRD161J-472	RESISTOR
	R227	QRD161J-104	RESISTOR
	R228	QRD161J-472	RESISTOR
	R235	QRD161J-472	RESISTOR
	R236	QRD161J-472	RESISTOR
	R237	QRD161J-123	RESISTOR
	R238	QRD161J-123	RESISTOR
	R262	QRD161J-103	RESISTOR
	R263	QRD161J-103	RESISTOR
	R271	QRD161J-473	RESISTOR
	R273	QRD161J-222	RESISTOR
	R277	QRD161J-222	RESISTOR
	R280	QRD161J-471	RESISTOR
	R281	QRD163J-394	RESISTOR
	R282	QRD161J-103	RESISTOR
	R285	QRD161J-223	RESISTOR
	C202	QETC1CM-106	E CAPACITOR
	C204	QCBB1HJ-101	CAPACITOR
	C205	QETC1HM-106	E CAPACITOR
	C207	QCVB1CM-103	CAPACITOR
	C208	QFV71HJ-333	TF CAPACITOR
	C209	QFV71HJ-153	TF CAPACITOR
	C210	QFV71HJ-333	TF CAPACITOR
	C211	QFV71HJ-153	TF CAPACITOR
	C215	QETC1CM-106	E CAPACITOR
	C216	QETC1HM-105	E CAPACITOR
	C217	QETC1CM-106	E CAPACITOR
	C218	QETC1EM-335	E CAPACITOR
	C219	QETC1CM-106	E CAPACITOR
	C221	QETC1CM-106	E CAPACITOR
	C222	QETC1CM-106	E CAPACITOR
	C223	QEK61CM-476	E CAPACITOR
	C224	QEK61HM-224	E CAPACITOR
	C230	QEK41CM-336	E CAPACITOR
	L204	PU59152-6R8K	PEAKING COIL
⚠	TH201	PU52108-2R2	POSITIVE THERMISTOR
	HD1	PU36378	HOLDER
⚠	CP201	ICP-F10	CIRCUIT PROTECTOR
	CN201	PU59555-8	CAP HOUSING
	CN202	PU58844-4	CAP HOUSING

⚠	REF. No.	PART No.	PART NAME, DESCRIPTION

****

TUNER CTL SUB BOARD ASSEMBLY <46>

⚠	REF. No.	PART No.	PART NAME, DESCRIPTION
	PWBA	PB10232A-05	TUNER CTL SUB BOARD ASSEMBLY
	IC301	LA1150N	IC
	Q301	2SC3936(BC)	TRANSISTOR
	Q302	2SC3936(BC)	TRANSISTOR
	Q303	2SC2480(S)	TRANSISTOR
	Q304	2SC2480(S)	TRANSISTOR
	Q305	2SC4081(RS)	TRANSISTOR
	Q310	DTC144EU	TRANSISTOR
	D311	DAN202U	DIODE
	R301	NRSA63J-750N	RESISTOR
	R302	NRSA63J-183N	RESISTOR
	R303	NRSA63J-332N	RESISTOR
	R304	NRSA63J-331N	RESISTOR
	R305	NRSA63J-221N	RESISTOR
	R306	NRSA63J-271N	RESISTOR
	R307	NRSA63J-221N	RESISTOR
	R308	NRSA63J-511N	RESISTOR
	R309	NRSA63J-183N	RESISTOR
	R310	NRSA63J-103N	RESISTOR
⚠	R311	NRSA63J-221N	RESISTOR
	R312	NRSA63J-102N	RESISTOR
	R313	NRSA63J-473N	RESISTOR
	R314	NRSA63J-473N	RESISTOR
	R315	NRSA63J-103N	RESISTOR
	R316	NRSA63J-103N	RESISTOR
	R317	NRSA63J-241N	RESISTOR
	R318	NRSA63J-471N	RESISTOR
	R319	NRSA63J-472N	RESISTOR
	R320	NRSA63J-223N	RESISTOR
	R321	NRSA63J-104N	RESISTOR
	R322	NRSA63J-103N	RESISTOR
	R325	NRSA63J-334N	RESISTOR
	R326	NRSA63J-334N	RESISTOR
	C301	QCYA1HK-222	CAPACITOR
	C302	QCYA1HK-222	CAPACITOR
	C303	QCYA1HK-222	CAPACITOR
	C304	QCTA1CH-2R0	CAPACITOR
	C305	QCTA1CH-2R0	CAPACITOR
	C306	QCYA1HK-222	CAPACITOR
	C307	QCYA1HK-222	CAPACITOR
	C308	NCT08CH-100A	CAPACITOR
	C309	QAT3120-7R0	TRIMMER CAPACITOR
	C310	QCFA1HZ-473	CAPACITOR
	C311	QCFA1HZ-473	CAPACITOR
	C312	QCTA1CH-100	CAPACITOR
	C313	QCFA1HZ-473	CAPACITOR
	C314	QEK60JM-226	E CAPACITOR
	C315	QEK61EM-475	E CAPACITOR

⚠	REF. No.	PART No.	PART NAME, DESCRIPTION
	CF301	PU58558-4	CERAMIC FILTER
	or	PU60774-4	CERAMIC FILTER
	CF302	PU58558-3	CERAMIC FILTER
	or	PU60774-3	CERAMIC FILTER
	CF303	PU32989-3	CERAMIC FILTER
	CF304	PU32989-3	CERAMIC FILTER
	T301	PU60948	IF.TRANSFORMER, TRAPE
	T302	PU60949	IF.TRANSFORMER, S.DET
	BKT1	PU60923	BRACKET
	SLD1	PU60924	SHIELD CASE
	SLD2	PU60925	SHIELD PLATE
	TML1	PU59935-8	TERMINAL
	TP301	PU45908	TEST PIN, X4,(301-304)

****

TUNER UNIT ASSEMBLY PU36432G-10

PB10112A-10	IF BOARD ASSEMBLY <07>
PB20208A1-03	TUNER CTL BOARD ASSEMBLY <08>
PB10232A-05	TUNER CTL SUB BOARD ASSEMBLY <46>